Technical data sheet

Spacer clip 732 FT

Item number: 1362386

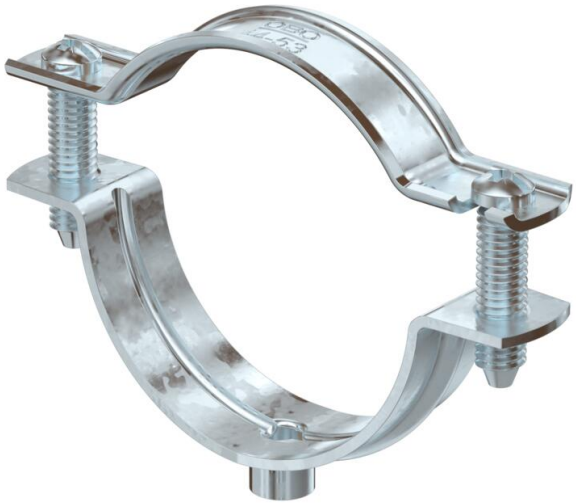

Spacer clip for the installation of pipes and cables on walls, ceiling and floors.
With self-locking upper part.
Approved for the maintenance of electrical function according to DIN 4102 Part 12, maintenance of electrical function classes E30 to E90.

E30 E60 E90

St	Steel
FT	Hot-dip galvanised

Master data

Item number	1362386
Type	ASG 732 53 FT
Description 1	Distance saddle
Description 2	with threaded connection M6
Manufacturer	OBO
Dimension	44-53mm
Material	Steel
Surface	Hot-dip galvanised
Surface standard	DIN EN ISO 1461
Smallest sales unit	20
Unit of quantity	Piece
Weight	4.942 kg
Weight unit	kg/100 pc.
CO2 Footprint (GWP) Cradle-to-Gate	0,1388 kg CO2e / 1 Piece

Technical data sheet

Spacer clip 732 FT

Item number: 1362386

Dimensions

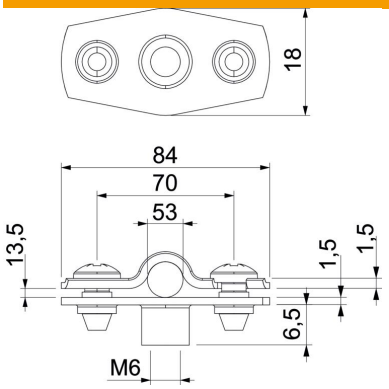

Dimension A	84 mm
Dimension B	70 mm
Dimension b	18 mm
Dimension D	53 mm
Dimension d max.	53 mm
Dimension d min.	44 mm
Dimension H1	6.5 mm
Dimension t1 (mm)	1.5 mm
Dimension t2 (mm)	1.5 mm
Dimension x	13.5 mm

Technical data

Distance to the wall	yes
Number of cables/pipes	1
Version for	Closed
Fastening type	Threaded connection
Maintain electrical functions	yes
For diameter	44 - 53
Halogen-free	yes
Plastic-covered	no
Material thickness	1.5 mm
ROHS-conformant	yes
Clamping range D, max.	53 mm
Clamping range D, min.	44 mm
UV-resistant	yes