Data Sheet | Item Number: 774-9973/1516-705

pre-assembled adapter cable; Eca; Socket/plug MIDI; 3-pole; Cod. S; H05Z1Z1-F 3x1,5 mm²; 7 m; 1,50 mm²; brown

https://www.wago.com/774-9973/1516-705

Color: brown

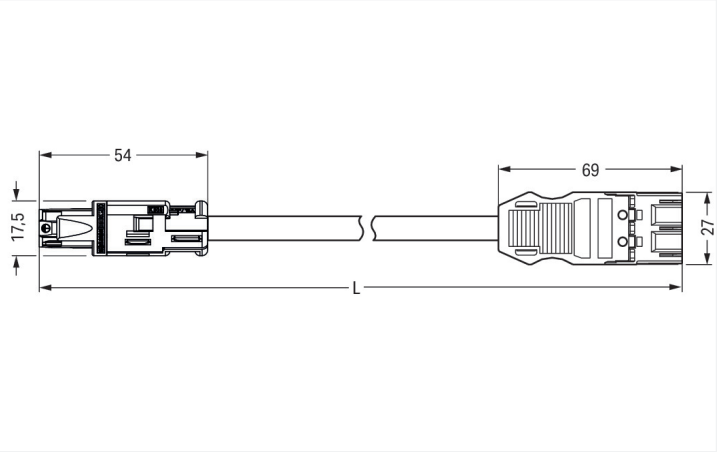

Dimensions in mm

Cable assembly *WINSTA*® RD with protection against mismating

The *WINSTA*® RD cable assembly with protection type IP20 is the pluggable solution for your application in control cabinets, for lighting connections or on PCBs. Whether on PCBs, in control cabinets or for connecting lights – pluggable installation connectors from WAGO allow you to establish connections according to an enormous variety of requirements in next to no time. The coding options reduce installation errors, allowing fast, maintenance-

free wiring of all components. The pluggable installation connector is protected against ingress by solid objects in accordance with protection type IP20 (When mated: IP2xC (These compact connectors are not designed for use in open, easily accessible areas!)). With *WINSTA*® RD, we have invented a product line that fits like a glove into conduits or boreholes due to its design. Building safety must be ensured at all times, even after the electrical installation stage. The mandatory safety requirements in connection with EU CPR are met by this product through fire class E. The cable assembly is halogen-free. This eliminates the addition of environmental pollutants during production. It also achieves a higher fire class, since halogen-free materials are flame-resistant.

Fast, secure pluggable connections – cable assemblies from WAGO

The cable assembly is provided with a RD socket and a MIDI plug. The WINSTA® Pluggable Connection System allows pluggable electrical installation. This saves time, lowers costs, and reduces the need for servicing. Enjoy the benefits of the pluggable version of our maintenance-free spring pressure connection technology too! Plan your installation with with protection against mismating from WAGO.

- effective protection against mismating
- products perfectly tailored to your requirements guarantee safe use
- for AC applications
- exact dimensions
- quick replacement of defective units during ongoing operation

Notes

Note	Cables with a different fire class can be found in the eShop.

Electrical data

Ratings per	IEC/EN 60664-1		
Overvoltage category	III	III	II
Pollution degree	3	2	2
Nominal voltage	250 V	-	-
Rated impulse withstand voltage	4 kV	-	-
Rated current	16 A	-	-

General information	
Note on contact resistance	approx. 1 mΩ of contact resistance approx. 0.25 mΩ contact transition plug/ socket

Connection Data

Total number of potentials	3

Connection 1	
Pole number	3
Wire cross-section	1.5 mm²
Connection type	RD socket - MIDI plug

Physical data

Width	27 mm / 1.063 inches
Height	17.5 mm / 0.689 inches
Total length	7 m

Mechanical data

Use	Switching function
Coding	S
Variable coding	No
Marking	1 2 L
Potential marking	L 2 1
Mating force of a plug-in connection	Approx. 30 … 70 N (depending on pole number)
Retention force of a plug-in connection	when locked: > 80N
Unmating force of a plug-in connection	Unlocked: approx. 30 … 70 N (depending on pole number)
Number of mating cycles	200, without resistive load
Connection type	RD socket - MIDI plug
Type of pre-assembled cable	Adapter cable

 Continued on next page

Mechanical data

Cable type	H05Z1Z1-F 3x1.5
Protection type	IP20; When mated: IP2xC (These compact connectors are not designed for use in open, easily accessible areas!)

Plug-in connection

Mismating protection	Yes
Note on mismating protection	All *WINSTA*® components are 100% protected against mismating when: a.) plugging different numbers of poles b.) plugging while incorrectly rotated c.) plugging while laterally staggered
Locking of plug-in connection	Locking lever

Material data

Note (material data)	Information on material specifications can be found here
Color	brown
Insulation material (main housing)	Polyamide (PA66)
Fire class per EN 50575	E_{ca}
Contact material	Copper or copper alloy; surface-treated
Contact Plating	Tin
Fire load	209.137 MJ
Connector color	brown
Strain relief color	black
Sheathed cable color	black
Printing color of sheathed cable	white
Halogen-free	Yes
Silicon-free	Yes
Sheath material	Halogen-free
Rubber cable	No
Weight	697.8 g
Copper weight of the raw cable	0.043 kg/m

Environmental requirements

Processing temperature	-5 … +40 °C
Continuous operating temperature	-35 … +85 °C
Note on continuous operating temperature	Cable for temperatures ≤ 70 °C (including halogen-free) Insulating parts for temperatures ≤ 105 °C

Commercial data

PU (SPU)	1 pcs
Packaging type	unpacked
Country of origin	DE
GTIN	4050821489597
Customs tariff number	85444290900

 Continued on next page

Product Classification

UNSPSC	26121629
eCl@ss 10.0	27-44-06-04
eCl@ss 9.0	27-44-06-04
ETIM 9.0	EC002587
ETIM 10.0	EC002587
ECCN	NO US CLASSIFICATION

Environmental Product Compliance

RoHS Compliance Status	Compliant,No Exemption

Approvals / Certificates

General approvals

Approval	Standard	Certificate Name
CCA DEKRA Certification B.V.	EN 61535	NTR NL-7969
CCA DEKRA Certification B.V.	EN 61984	NTR NL-7848
KEMA/KEUR DEKRA Certification B.V.	EN 61535	71-123229
KEMA/KEUR DEKRA Certification B.V.	EN 61984	71-114944

Declarations of conformity and manufacturer's declarations

Approval	Standard	Certificate Name
EU-Declaration of Conformity WAGO GmbH & Co. KG	-	-
UK-Declaration of Conformity WAGO GmbH & Co. KG	-	-

Downloads

Environmental Product Compliance

Compliance Search

Environmental Product Compliance
774-9973/1516-705

Documentation

Bid Text

774-9973/1516-705	19.02.2019	xml 2.97 KB	
774-9973/1516-705	19.02.2015	doc 24.00 KB	

 Continued on next page

CAD/CAE-Data

CAE data

WSCAD Universe
774-9973/1516-705

1 Compatible Products

1.1 Required Accessories

1.1.1 Cover

1.1.1.1 Cover

Item No.: 770-360
Lockout cap; for plugs; 5-pole; separable; yellow

1.1.2 Locking system

1.1.2.1 Locking system

Item No.: 770-101
Locking lever; for flying leads; for manual operation; black

Item No.: 770-121
Locking lever; for flying leads; for manual operation; white

Item No.: 770-111
Locking lever; for flying leads; for tool operation; black

Item No.: 770-131
Locking lever; for flying leads; for tool operation; white

1.2 Optional Accessories

1.2.1 Coding

1.2.1.1 Coding

Item No.: 770-401
Coding pin; for plugs; Plastic; gray