Data Sheet | Item Number: 221-529/002-000

Mounting carrier; for 10-wire connectors; 221 Series - 4 mm²; with snap-in mounting foot; white

https://www.wago.com/221-529/002-000

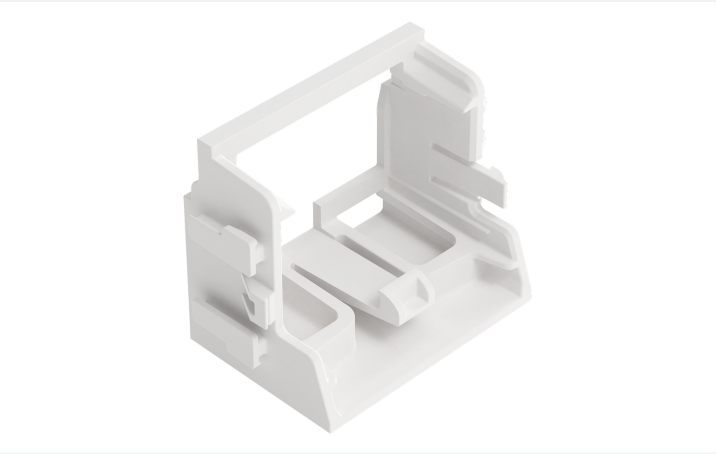

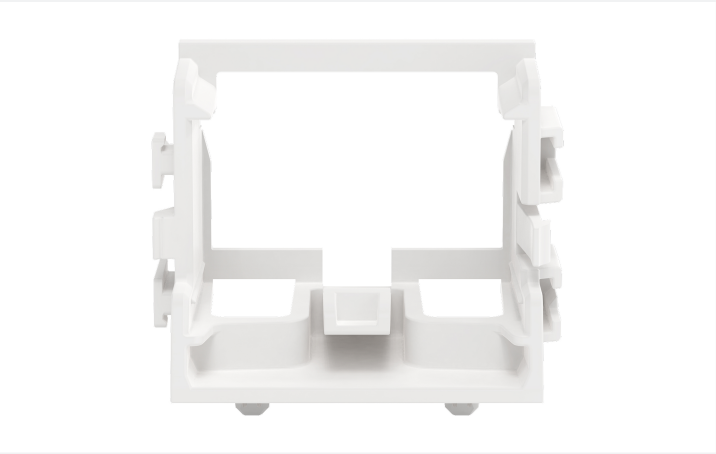

Color: white

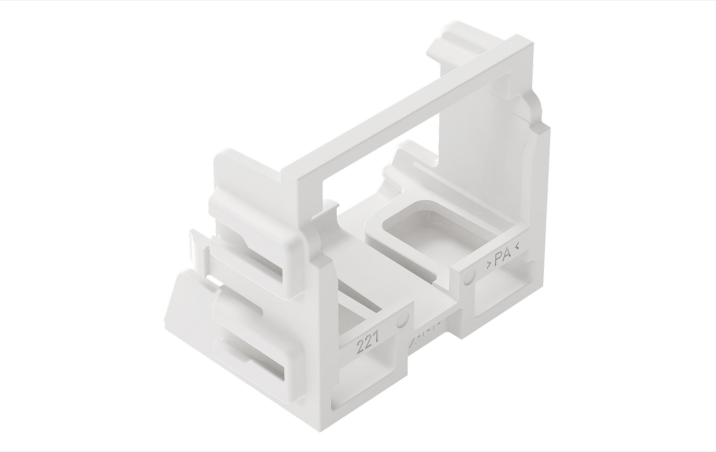

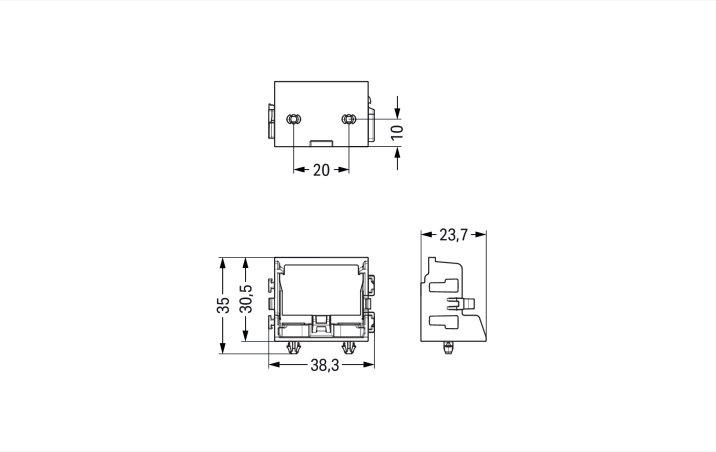

Physical data

Width	38.3 mm / 1.508 inches
Height	35 mm / 1.508 inches
Height from the surface	55 mm / 2.165 inches
Depth	23.7 mm / 0.933 inches

Mechanical data

Mounting type	Snap-in foot
Mounting type	with snap-in mounting foot for vertical mounting
Suitable	for 10-wire connectors (4 mm²)

Material data

Note (material data)	Information on material specifications can be found here
Color	white
Material group	I
Insulation material (main housing)	Polyamide (PA66)
Flammability class per UL94	V0
Fire load	0.152 MJ
Weight	5.1 g

Commercial data

PU (SPU)	10 pcs
Packaging type	Box
Country of origin	CN
GTIN	4066966603729
Customs tariff number	39269097900

Product Classification

UNSPSC	39121409
ETIM 9.0	EC002848
ETIM 10.0	EC002848
ECCN	NO US CLASSIFICATION

Environmental Product Compliance

RoHS Compliance Status	Compliant,No Exemption

Downloads

Environmental Product Compliance

Compliance Search

Environmental Product Compliance 221-529/002-000

 Continued on next page

CAD/CAE-Data

CAD data

2D/3D Models
221-529/002-000

1 Compatible Products

1.1 Optional Accessories

1.1.1 Marking

1.1.1.1 Marking strip

Item No.: 210-833
Marking strips; 25 m on roll; 6 mm wide; plain; Self-adhesive; white