Data Sheet | Item Number: 221-549/002-000

Mounting carrier; for 10-wire connectors; 221 Series - 4 mm²; for DIN-35 rail; white

https://www.wago.com/221-549/002-000

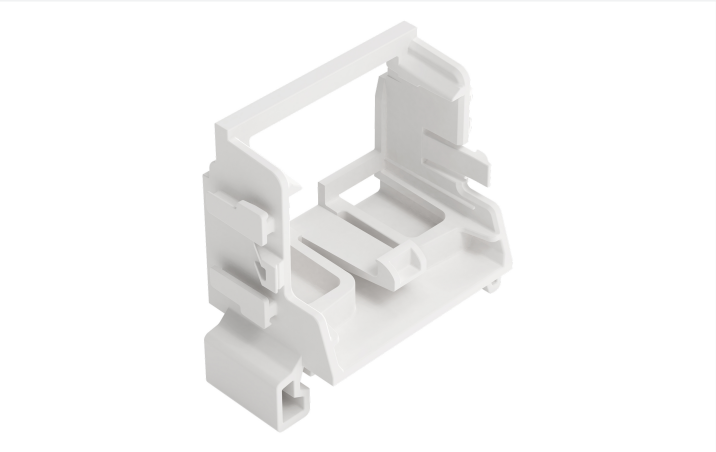

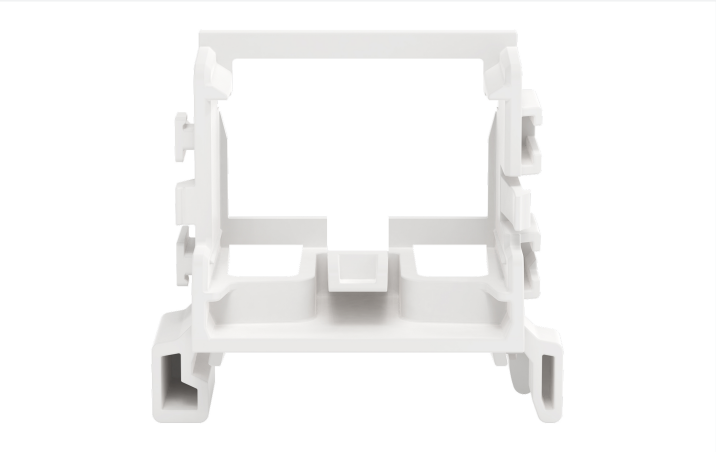

Color: white

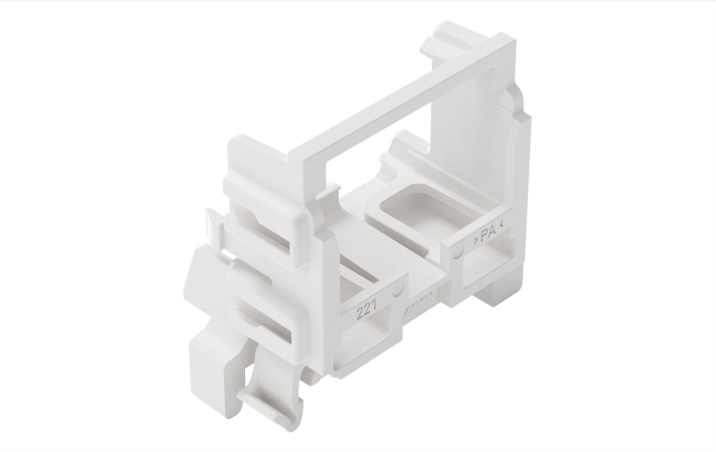

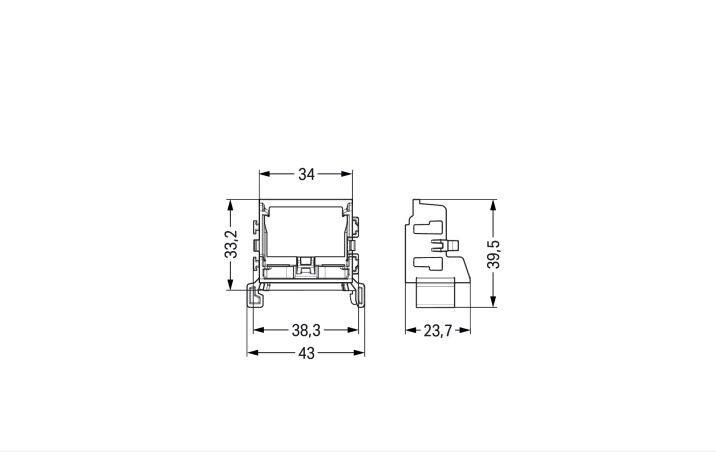

Physical data

Width	43 mm / 1.693 inches
Height	23.7 mm / 0.933 inches
Depth from upper-edge of DIN-rail	33.2 mm / 1.307 inches
Depth	39.5 mm / 1.555 inches

Mechanical data

Mounting type	Snapping on
Mounting type	DIN-35 rail
Suitable	for 10-wire connectors (4 mm²)

Material data

Note (material data)	Information on material specifications can be found here
Color	white
Material group	I
Insulation material (main housing)	Polyamide (PA66)
Flammability class per UL94	V0
Fire load	0.182 MJ
Weight	6.1 g

Commercial data

PU (SPU)	10 pcs
Packaging type	Box
Country of origin	CN
GTIN	4066966603873
Customs tariff number	39269097900

Product Classification

ETIM 9.0	EC002848
ETIM 10.0	EC002848
ECCN	NO US CLASSIFICATION

Environmental Product Compliance

RoHS Compliance Status	Compliant,No Exemption

Downloads

Environmental Product Compliance

Compliance Search

Environmental Product Compliance
221-549/002-000

 Continued on next page

CAD/CAE-Data

CAD data

2D/3D Models
221-549/002-000

1 Compatible Products

1.1 Optional Accessories

1.1.1 Marking

1.1.1.1 Marking strip

Item No.: 210-833
Marking strips; 25 m on roll; 6 mm wide; plain; Self-adhesive; white