Data Sheet | Item Number: 771-9973/007-802

pre-assembled interconnecting cable; Eca; Socket/plug; 3-pole; Cod. P; H05VV-F 3G 2.5 mm²; 8 m; 2,50 mm²; red

https://www.wago.com/771-9973/007-802

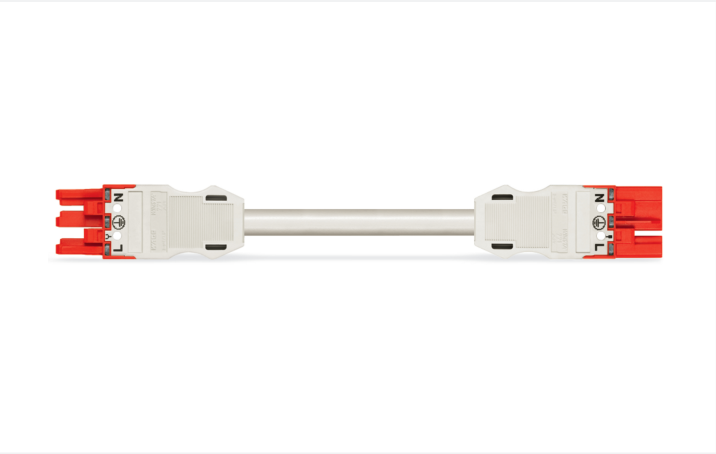

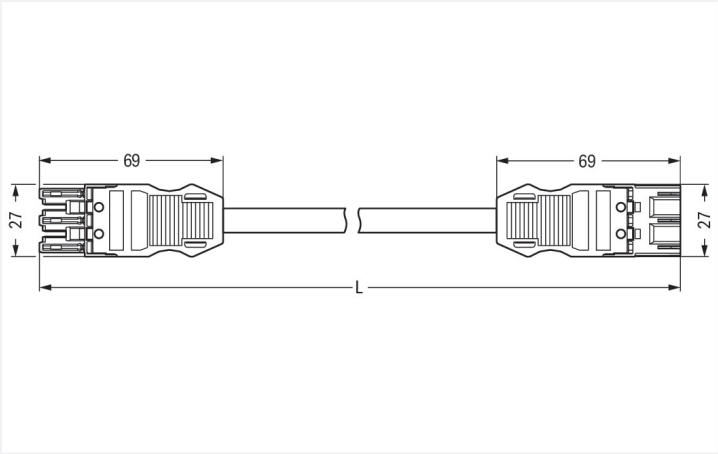

Color: ■ red

Dimensions in mm

Cable assembly *WINSTA*® MIDI P coding

For power and signal transmission: The *WINSTA*® MIDI cable assembly with protection against mismating. On PCBs, in control cabinets or for connecting lights – pluggable installation connectors from WAGO allow you to make connections according to an enormous variety of requirements in no time flat. The color coding and mechanical coding of the pluggable installation connector ensure error-free installation of the individual components – including protection against mismating. The pluggable installation connector offers touch-proof protection with live components in accordance with protection type IP20 (When mated: IP2xC (These compact connectors are not designed for use in open, easily accessible areas!)). *WINSTA*® MIDI pluggable installation connectors with P coding are utilised for applications involving uninterruptible power supplies. This pluggable installation connector is used for electrical currents up to 20 A. Thus the product is especially suitable for high power loads. *WINSTA*® MIDI with Push-in CAGE CLAMP® spring pressure connection technology is found in can be found in a variety of projects you can use for quick, easy and maximally flexible installation. This product meets all the mandatory safety requirements of fire class E; as a result it can be used in domains where fire safety is relevant.

Fast, error-free assembly thanks to cable assemblies from WAGO

The cable assembly is provided with a socket and a plug. The WINSTA® Pluggable Connection System allows pluggable electrical installation. This saves time, lowers costs, and reduces the need for servicing. Now you can also lower installation costs without compromising quality and safety: with strain relief hosting reduces the need for servicing and prevents unnecessary downtime.

- effective protection against mismating
- pre-assembled versions
- for UPS applications
- ready to install and use immediately
- quick replacement of defective units during ongoing operation

Notes

Note	Cables with a different fire class can be found in the eShop.

Electrical data

Ratings per	IEC/EN 60664-1		
Overvoltage category	III	III	II
Pollution degree	3	2	2
Nominal voltage	250 V	-	-
Rated impulse withstand voltage	4 kV	-	-
Rated current	20 A	-	-

General information	
Note on contact resistance	approx. 1 mΩ of contact resistance approx. 0.25 mΩ contact transition plug/socket

Connection Data

Total number of potentials	3
PE function	Preceding PE contact

Connection 1	
Pole number	3
Wire cross-section	2.5 mm²
Connection type	Socket - Plug

Physical data

Pin spacing	10 mm / 0.394 inches
Width	27 mm / 1.063 inches
Height	12.9 mm / 0.508 inches
Total length	8 m

Mechanical data

Use	EDV (UPS)
Coding	P
Variable coding	No
Marking	L ⏚ N
Potential marking	L ⏚ N
Mating force of a plug-in connection	approx. 20 … 70 N (depending on pole number)
Retention force of a plug-in connection	when locked: > 80N
Unmating force of a plug-in connection	when unlocked: approx. 20 … 70 N (depending on pole number)
Number of mating cycles	200, without resistive load
Connection type	Socket - Plug
Type of pre-assembled cable	Interconnecting cable
Cable type	H05VV-F 3G2.5
Protection type	IP20; When mated: IP2xC (These compact connectors are not designed for use in open, easily accessible areas!)

Plug-in connection

Mismating protection	Yes
Note on mismating protection	All *WINSTA*® components are 100% protected against mismating when: a.) plugging different numbers of poles b.) plugging while rotated 180 c.) plugging while laterally staggered d.) plugging one pole
Locking lever	Can be retrofitted
Locking of plug-in connection	Locking lever
Note on locking system	All connectors for mounted installations (snap-in versions for lighting fixtures or devices, all types of PCB and distribution connectors) are factory-equipped with locking levers to ensure plugs and sockets are securely locked. Additional locking levers are only required for flying leads (plug/socket).

 Continued on next page

Material data

Note (material data)	Information on material specifications can be found here
Color	red
Insulation material (main housing)	Polyamide (PA66)
Fire class per EN 50575	E_{ca}
Contact material	Copper or copper alloy; surface-treated
Contact Plating	Tin
Fire load	239.458 MJ
Connector color	red
Strain relief color	white
Printing color of strain relief	black
Sheathed cable color	white
Printing color of sheathed cable	black
Halogen-free	No
Silicon-free	Yes
Sheath material	PVC
Rubber cable	No
Weight	1286.9 g
Copper weight of the raw cable	0.072 kg/m

Environmental requirements

Processing temperature	-5 … +40 °C
Continuous operating temperature	-35 … +85 °C
Note on continuous operating temperature	Cable for temperatures ≤ 70 °C (including halogen-free) Insulating parts for temperatures ≤ 105 °C

Commercial data

PU (SPU)	1 pcs
Packaging type	unpacked
Country of origin	DE
GTIN	4055143484701
Customs tariff number	85444290900

Product Classification

UNSPSC	26121629
eCl@ss 10.0	27-44-06-04
eCl@ss 9.0	27-44-06-04
ETIM 9.0	EC002587
ETIM 10.0	EC002587
ECCN	NO US CLASSIFICATION

Environmental Product Compliance

RoHS Compliance Status	Compliant,No Exemption

 Continued on next page

Approvals / Certificates

General approvals

Approval	Standard	Certificate Name
CCA DEKRA Certification B.V.	EN 61535	NTR NL-7972
KEMA/KEUR DEKRA Certification B.V.	EN 61535	71-123834

Declarations of conformity and manufacturer's declarations

Approval	Standard	Certificate Name
EU-Declaration of Conformity WAGO GmbH & Co. KG	-	-
UK-Declaration of Conformity WAGO GmbH & Co. KG	-	-

Downloads

Environmental Product Compliance

Compliance Search

Environmental Product Compliance
771-9973/007-802

Documentation

Bid Text

771-9973/007-802	19.02.2019	xml 2.90 KB	
771-9973/007-802	04.12.2014	doc 24.50 KB	

CAD/CAE-Data

CAE data

WSCAD Universe
771-9973/007-802

1 Compatible Products

1.2 Optional Accessories

1.2.3 Marking

1.2.3.1 Marker

Item No.: 770-450/000-006
Marker card; Plastic; blue

Item No.: 770-450/000-001
Marker card; Plastic; green

Item No.: 770-450/000-012
Marker card; Plastic; orange

Item No.: 770-450/000-005
Marker card; Plastic; red

Item No.: 770-450
Marker card; Plastic; white

Item No.: 770-450/000-002
Marker card; Plastic; yellow

 Continued on next page

1.2.3.2 Marking strip

Item No.: 210-334
Marking strips; as a DIN A4 sheet; Strip width 5 mm; Strip length 182 mm; plain; Self-adhesive; white