ATAG

SPARE PARTS EXPLODED VIEW
HEAT PUMPS
Model
ENERGION ODU 120-150T R32

R8219092-02 - 22/09/2023

EN	FR	IT	ES	DE	NL

Col	Reference	Model type	Begin	End
1	3630287	ENERGION ODS 120 T	02-2023	-
2	3630288	ENERGION ODS 150 T	02-2023	-

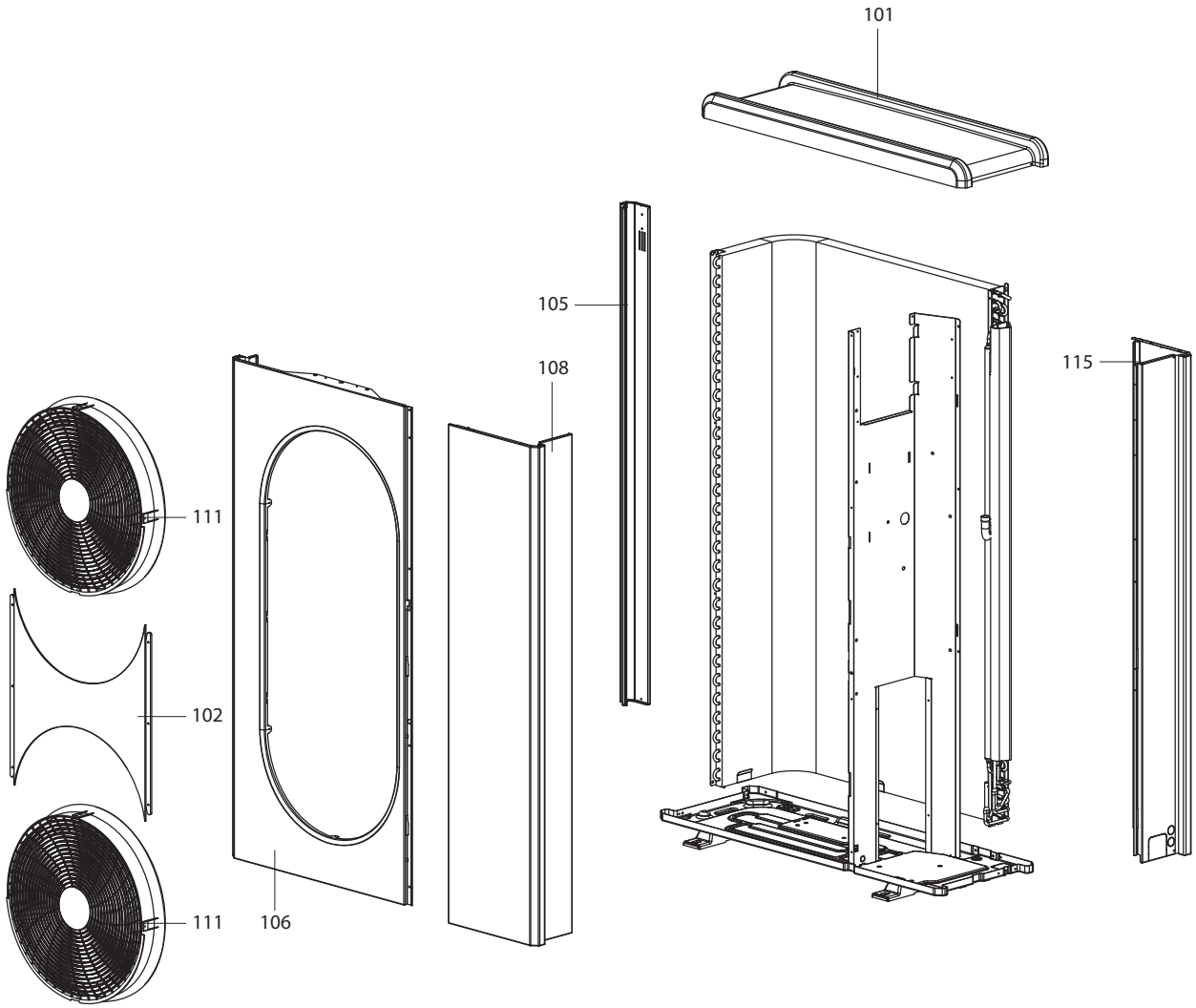
101
105
108
115
111
102
111
106

	Description	Manf. Pt. N	Type	1 ENERGION ODS 120 T	2 ENERGION ODS 150 T	3	4	5	6	7	8	9	10	11	12	13	14	15	16	17	18	From	to
0100	CHASSIS-FRONT CASE																						
0101	TOP COVER	65153069		●	●																		
0102	GRILLE CONNECTION PLATE	65155108		●	●																		
0105	LEFT PILLAR	65122284	35	●	●																	04/23	
	LEFT PILLAR	65153082	35	●	●																		03/23
	LEFT PILLAR	65122284	AL	●	●																	05/23	
	LEFT PILLAR	65153082	AL	●	●																		04/23
0106	FRONT PANEL	65155936		●	●																		
0108	FRONT RIGHT PANEL	65155940		●	●																		
0111	FRONT GRILL	65153073		●	●																		
0115	BACK RIGHT PANEL	65155649		●	●																		

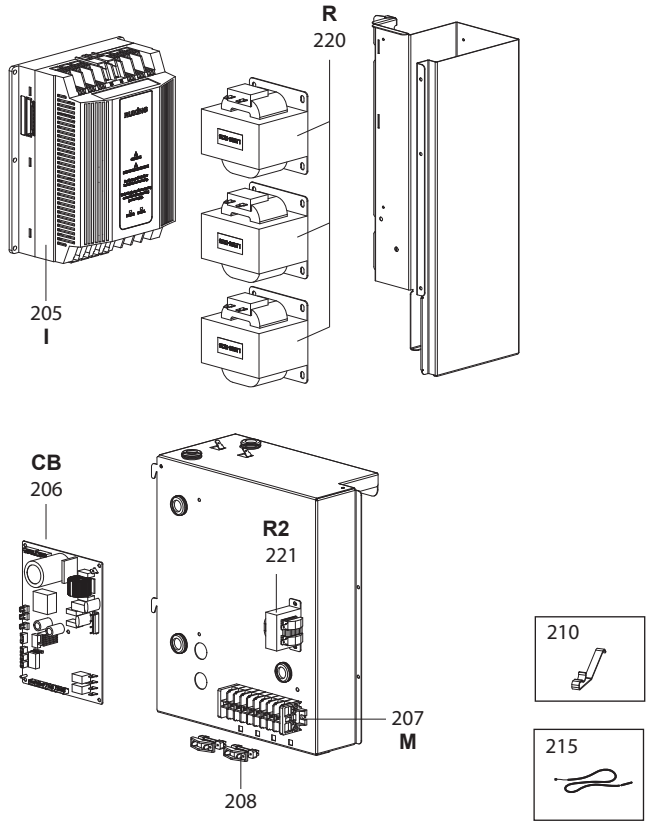
R
220
205
I
CB
206
R2
221
207
M
208
210
215

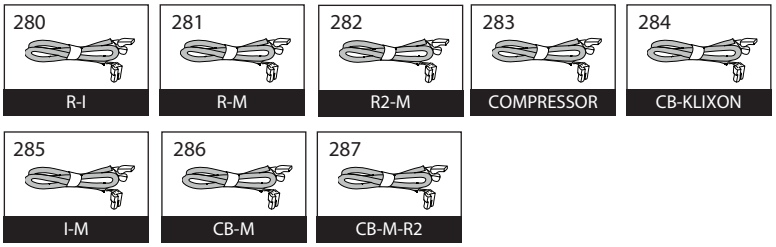
280
R-I
281
R-M
282
R2-M
283
COMPRESSOR
284
CB-KLIXON
285
I-M
286
CB-M
287
CB-M-R2

	Description	Manf. Pt. N	Type	1 ENERGION ODS 120 T	2 ENERGION ODS 150 T	3	4	5	6	7	8	9	10	11	12	13	14	15	16	17	18	From	to
0200	ELECTRICAL BOX																						
0205	P.C.B. (INVERTER)	65122587		●																			
	P.C.B. (INVERTER)	65122588			●																		
0206	CONTROL BOARD	65155641		●	●																		
0207	9-POLES TERMINAL BLOCK	65153100		●	●																		
0208	CABLE CLAMP	65120803		●	●																		
0210	PROBE CLIP	65115989		●	●																		
0215	PROBE TD+TO	65155118		●	●																		
	PROBE TE	65155119		●	●																		
	PROBE TEO	65155120		●	●																		
	PROBE TS	65155117		●	●																		
0220	REACTOR LE105-1325	65153058		●	●																		
0221	REACTOR R0405RJ	65004029		●	●																		
0280	WIRING (REACTOR - INVERTER)	65155084		●	●																		
0281	WIRING (REACTOR - TERMINAL BLOCK)	65155085		●	●																		
0282	WIRING (REACTOR R0405RJ - INVERTER)	65155643		●	●																		
0283	COMPRESSOR CABLE	65155090		●	●																		
0284	WIRING (KLIXON)	65155504		●	●																		
0285	CABLE MODBUS INVERTER	65155647		●	●																		
0286	CABLE MODBUS CONTROL BOARD	65155646		●	●																		
0287	POWER SUPPLY CABLE CONTROL BOARD	65155645		●	●																		

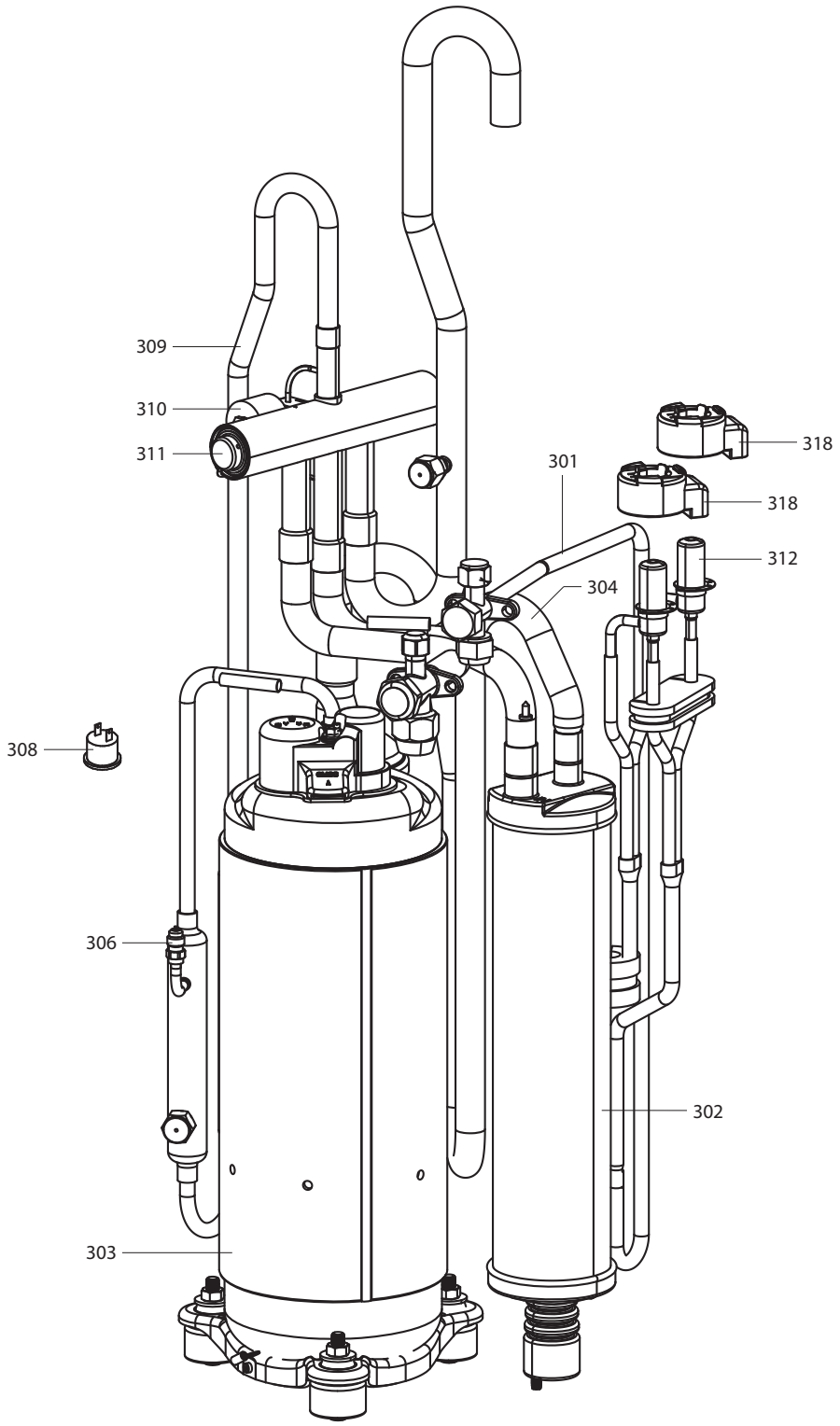
309
310
311
301
318
318
312
304
308
306
302
303

	Description	Manf. Pt. N	Type	ENERGION ODS 120 T	ENERGION ODS 150 T	3	4	5	6	7	8	9	10	11	12	13	14	15	16	17	18	From	to
0300	REFRIGERATION UNIT																						
0301	CAPILLARY ASSY	65155638		●	●																		
0302	LIQUID ACCUMULATOR	65153418		●	●																		
0303	COMPRESSOR EKTQ360D1UNUA (GMCC)	65154986		●	●																		
0304	COMPRESSOR SUCTION PIPE	65155640		●	●																		
0306	HIGH PRESSURE SWITCH	65154979		●	●																		
0308	KLIXON KSD301	65155470		●	●																		
0309	4-WAY VALVE LINE ASSY	65155637		●	●																		
0310	4-WAY VALVE COIL	65120793		●	●																		
0311	4-WAY VALVE	65121620		●	●																		
0312	ELECTRONIC EXPANSION VALVE	65155639		●	●																		
0318	ELECTROVALVE COIL	65155642		●	●																		

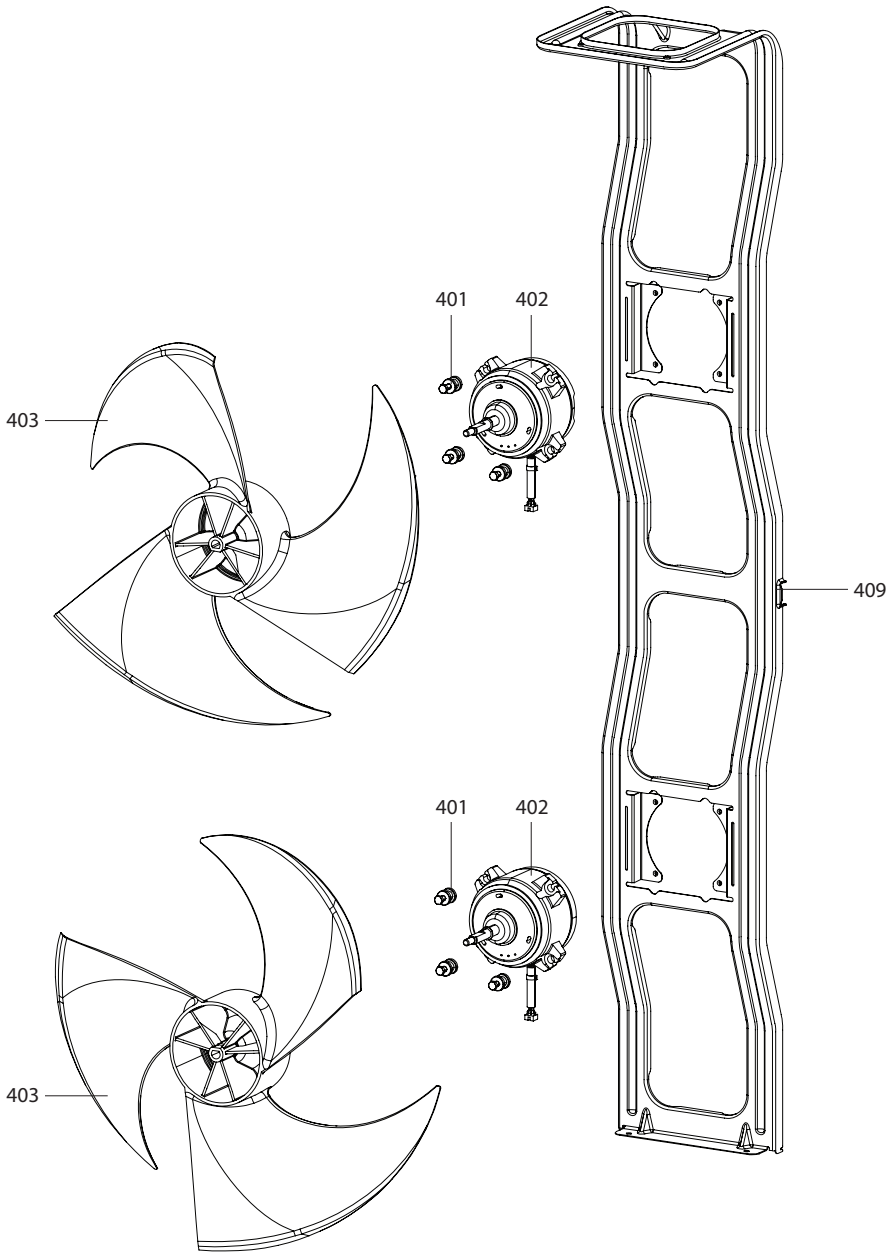
401
402
403
409
401
402
403

	Description	Manf. Pt. N	Type	ENERGION ODS 120 T	ENERGION ODS 150 T	3	4	5	6	7	8	9	10	11	12	13	14	15	16	17	18	From	to
0400	FAN GROUP																						
0401	MOTOR FIXING SCREW	65004861		●	●																		
0402	FAN MOTOR	65153052		●	●																		
0403	FAN	65153044		●	●																		
0409	MOTOR MOUNTING BRACKET	65153416		●	●																		

[illegible]NIZZATE

[illegible]

[illegible]

[illegible]

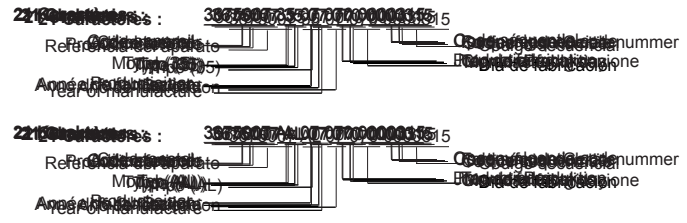

[illegible]