SPARE PARTS EXPLODED VIEW
BOILERS
Model
CKZ H

R8218842-02 - 24/08/2022

EN	FR	IT	ES	DE	NL

CKZ H

Boilers

Col	Reference	Model type	Begin	End
1	3060863	CKZ 80 H	12-2021	-
2	3060864	CKZ 100 H	12-2021	-
3	3060865	CKZ 200 H	12-2021	-
4	3060878	CKZ 300 H	06-2022	-
5	3060879	CKZ 400 H	06-2022	-
6	3060880	CKZ 500 H	06-2022	-

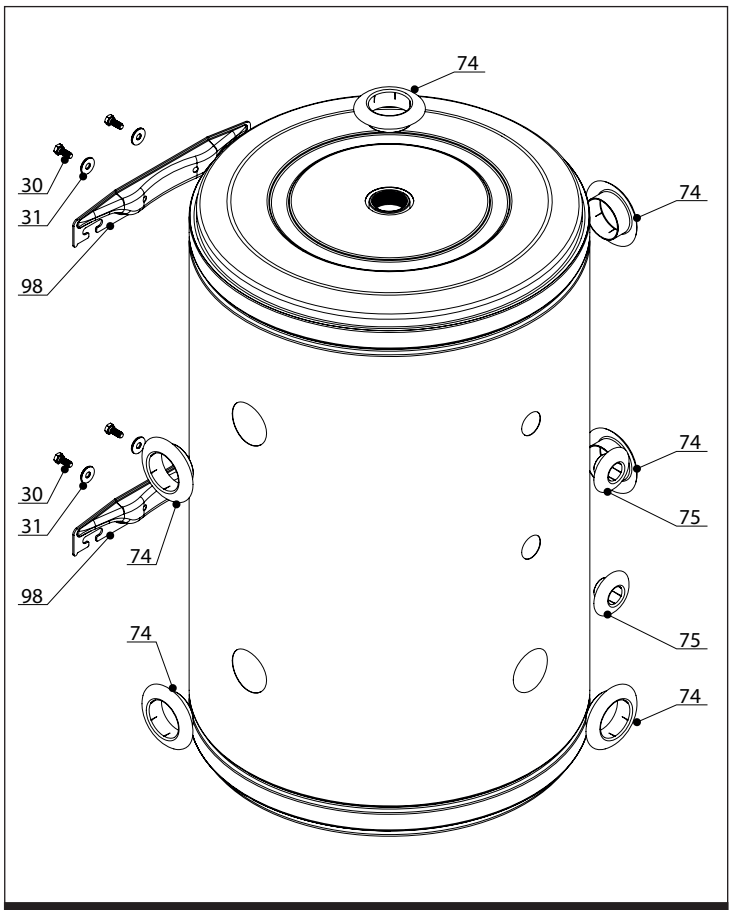

80 - 100 LT.

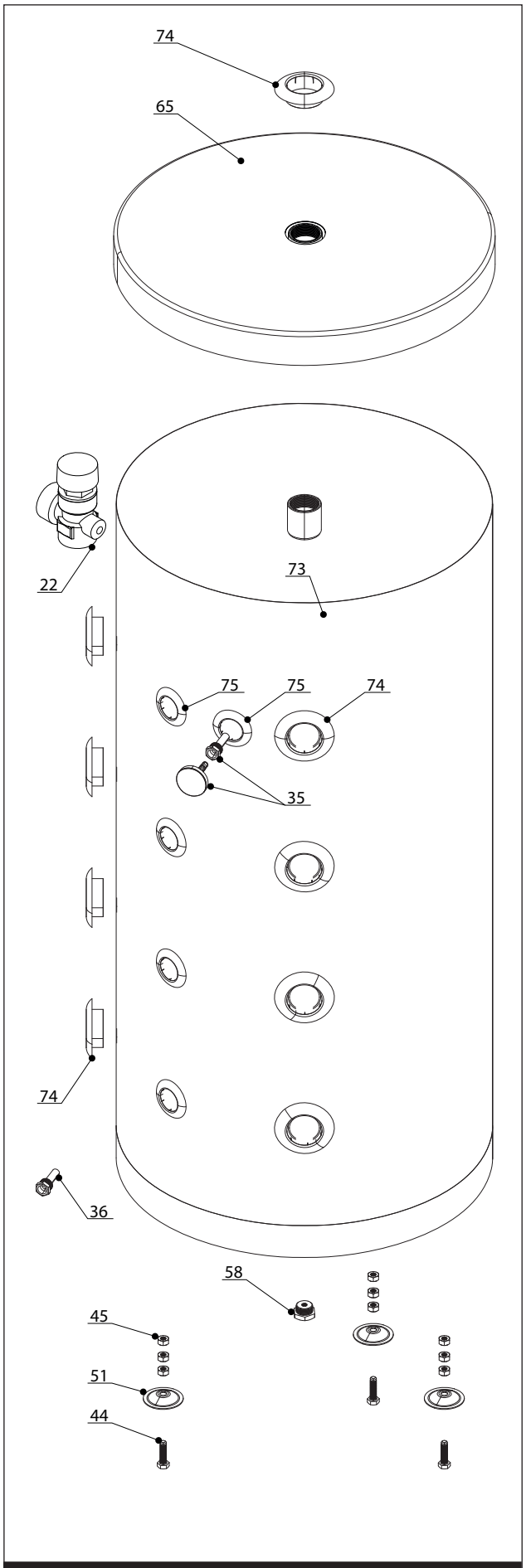

200 - 500 LT.

	Description	Manf. Pt. N	Type	80 LT. 1	100 LT. 2	200 LT. 3	300 LT. 4	400 LT. 5	500 LT. 6	7	8	9	10	11	12	13	14	15	16	17	18	From	to
0022	SAFETY VALVE FC 3 BAR - 3/4IN	65121519				■																	
	SAFETY VALVE FC 6 BAR - 3/4IN	65121738					■	■	■														
0030	BOLT M8X16	65121511		■	■																		
0031	WASHER D.8	65121512		■	■																		
0035	THERMOMETER & SENSOR POCKET D.8 X 1/2IN	65121520				■	■	■	■														
0036	SHEATH D.8 X 1/2IN BRASS 40MM	65121916				■	■	■	■														
0044	BOLT M10X40	65121516				■	■	■	■														
0045	NUT M10	65121517				■	■	■	■														
0051	FOOT	65121518				■	■	■	■														
0058	FITTING M3/4INXF8MM	65121515				■	■	■	■														
0065	TOP COVER D.600	65121514				■	■																
	TOP COVER D.700	65121736						■	■														
0073	EXTERNAL PVC INSULATION	65121513				■																	
	EXTERNAL PVC INSULATION	65121733					■																
	EXTERNAL PVC INSULATION	65121734						■															
	EXTERNAL PVC INSULATION	65121735							■														
0074	ROSETTE 1-1/2IN BLACK	65121508		■	■	■	■																
	ROSETTE 2IN BLACK	65121737						■	■														
0075	ROSETTE 1/2IN BLACK	65121509		■	■	■	■	■	■														
0098	WALL BRACKET	65121510		■	■																		

LIST OF THE ABBREVIATIONS

HW	:	Hot water.
CW	:	Cold water.
C	:	Ceramic resistance (normal heating).
Ca	:	Ceramic resistance (accelerated heating)
TP	:	Immersion heater.
1F	:	With fittings.
2F	:	Without fittings.
3F	:	With fittings and another outlet connection.
AMI	:	With mixing valve.
SMI	:	Without mixing valve.
PUISS	:	Power of th appliance.
PN	:	Appliance with normal pression.
LP	:	Appliance with low pression.
PV	:	Appliance with variable power.
PF	:	Appliance with fixed power.

IDENTIFICATION PLATE

SERIAL NUMBER

6 Characters : 03 09 08
- Year of manufacture
- Manufacturing day
- Month of manufacture

9 Characters : 5 9 12 0606
- Year of manufacture
- Month of manufacture
- Sequencial number

14 Characters : SI-V-0B0 45 07 0001
- Sequencial number
- Year of manufacture : 6 → 2004, 7 → 2005, 8 → 2006, etc ...
- Month of manufacture : 25 → January, 13 → February, 32 → March, 35 → April, 39 → May, 45 → June, 43 → July, 29 → August, 40 → September, 38 → October, 51 → November, 12 → December
- Product model

14 Characters : 111518 XX 000010
- Month of manufacture
- Day of manufacture
- Sequencial number
- Year of manufacture

15 Characters : 02 11 00001 007843
- Year of manufacture
- Month of manufacture
- Product reference
- Sequencial number

21 Characters : 3200050 XX 08115 0000001
- Product reference
- Sequencial number
- Year (08) / Manufacturing day (115)

22 Characters : 3200050 XX 070115 0000001
- Product reference
- Sequencial number
- Year (07) / Month (01) / Manufacturing day (15)

The indications mentionned on the prices, commercial or technical literature and the scheme are written for your guidance and are available at a given time. The CONSTRUCTOR retains the power to modify the presentation, the form, the size, the conception or the material of the products.