Technical data sheet

WDK CEE adapter flange 32 A

Item number: 6024033

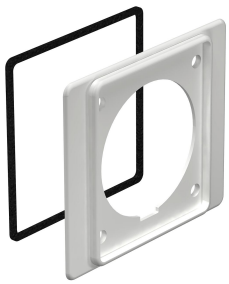

Adapter flange for CEE 32 A sockets.
Installed from the CEE sockets behind the cover of the accessory mounting boxes.

CE

PVC Polyvinylchloride

Master data

Item number	6024033
Type	2393 32
Description 1	Adapter flange
Description 2	for CEE sockets 32 A
Manufacturer	OBO
Colour	Stone grey; RAL 7030
Material	Polyvinylchloride
Smallest sales unit	5
Unit of quantity	Piece
Weight	4 kg
Weight unit	kg/100 pc.
CO2 Footprint (GWP) Cradle-to-Gate	0,1807 kg CO2e / 1 Piece

Technical data sheet

WDK CEE adapter flange 32 A

Item number: 6024033

Dimensions

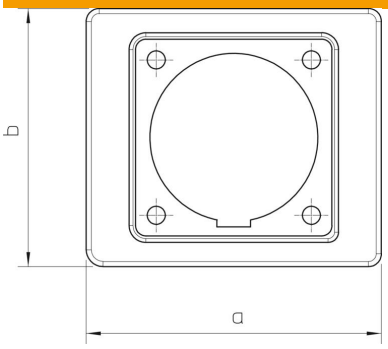

Dimension a	110 mm
Dimension b	96 mm

Technical data

Type of accessory	Adapter flange
Suitable for	CEE 32 A
ROHS-conformant	yes
Accessories	yes
Spare part	no