TARA Tissue holder without cover - Platinum

83 500 892 Product version from 4/1/2024

- width 152mm
- height 100 mm
- rosette Ø 55 mm
- 72mm projection

Platinum	83 500 892-08
Chrome	83 500 892-00
Brushed Platinum	83 500 892-06
Dark Chrome	83 500 892-19
Brushed Durabrass (23kt Gold)	83 500 892-28
Matte Black	83 500 892-33
Brushed Gold (PVD)	83 500 892-37
Brushed Dark Brass (PVD)	83 500 892-39
Brushed Bronze (PVD)	83 500 892-42
Brushed Dark Bronze (PVD)	83 500 892-43
Brushed Champagne (22kt Gold)	83 500 892-46
Champagne (22kt Gold)	83 500 892-47
Brushed Chrome	83 500 892-93
Brushed Dark Platinum	83 500 892-99

We reserve the right to change designs, product range and technical specifications without prior notice.
More information can be found at: www.dornbracht.com +49 (0) 2371 8899 900 mail@dornbracht.com

TARA Tissue holder without cover - Platinum

83 500 892 Product version from 4/1/2024

mm [inches]

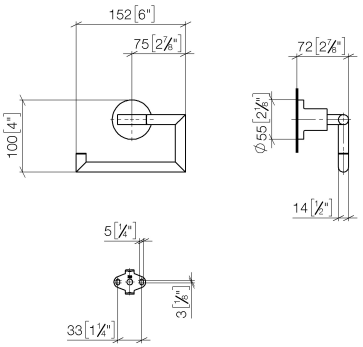

TARA Tissue holder without cover - Platinum

83 500 892 Product version from 4/1/2024

Parts for other finishes can be found here: Chrome

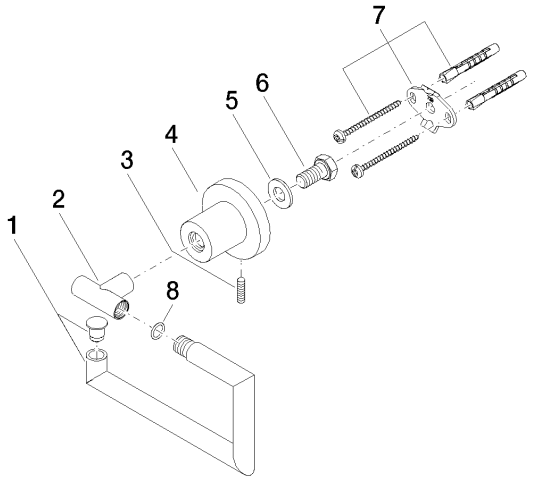

Spare parts list

No.	Item Number	Name	Quantity used	Delivery time
2	05 17 89 552 00-08	Holder for toilet roll holder without cover 31,5 x 14 x 40 mm - Platinum	1.00	54
8	09 14 10 042 90	O-Ring EPDM 70 9,0 x 1,5 mm -	1.00	14
1	90 28 22 640 00-08	Holder 152 x 80 x 14 mm - Platinum	1.00	-
	Spare part can no longer be ordered, please order the replacement item			
5	09 30 11 046 90	Washer Ø 10,5 -	1.00	14
4	08 17 89 505-08	Holder universal 60 x 100 x 60 mm - Platinum	1.00	54
3	04 31 11 113 00 90	Mounting Threaded pin M5 x 12 mm -	1.00	14
6	09 30 30 071 90	Mounting Hexagonal bolt with thread as far as head M10 x 20 mm -	1.00	14
7	05 17 20 739 00 90	Attachment set 150 x 65 x 10 mm -	1.00	14

We reserve the right to change designs, product range and technical specifications without prior notice.
More information can be found at: www.dornbracht.com +49 (0) 2371 8899 900 mail@dornbracht.com