Kalani Pole Clamp
0056830

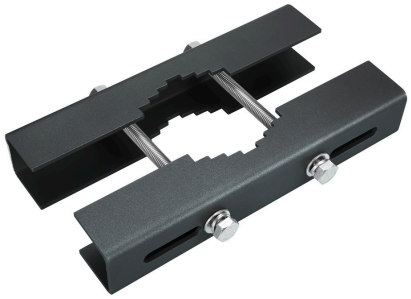

Features

• Pole clamp to fix floodlight onto 60-100mm poles at any mounting height, compatible with Kalani. Weight: 3kg.

Product Overview

Product name	Kalani Pole Clamp
Technology	Accessory
Housing	Aluminium
General application	Logistics & Industry
ETIM Class	EC002557
Housing colour	RAL9017
Product EAN number	5410288568300
Warranty	5 years

Light your world

© Feilo Sylvania | Date Printed:31.01.2025

Kalani Pole Clamp
0056830

Technical drawings

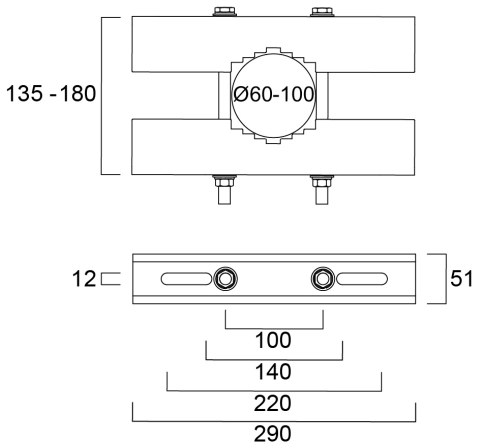

Data table

GENERAL DATA

Product name	Kalani Pole Clamp
Technology	Accessory
Accessory type	Mounting
Type of accessory	Plug/clamp
Housing	Aluminium
General application	Logistics & Industry
ETIM Class	EC002557
Warranty	5 years

ELECTRICAL DATA

Control gear required	No

PHYSICAL DATA

Housing colour	RAL9017
Nominal Product Length (mm)	290

Light your world

© Feilo Sylvania | Date Printed:31.01.2025

Kalani Pole Clamp
0056830

Nominal Product Width (mm)	51
Nominal Product Height (mm)	57
Weight (kg)	3.0

PACKAGING

Product EAN number	5410288568300
Packaging single length / height (cm)	7.5
Packaging single width (cm)	7.5
Packaging single depth (cm)	30.5
DUN14 (inner)	15410288568307
Units per outer package	2
Packaging outer length / height (cm)	32.5
Packaging outer width (cm)	17.5
Packaging outer depth (cm)	9.5

SAFETY DATA

Special purpose lamp	No
Dry applications use only	No
Suitable for household illumination	No

© Feilo Sylvania | Date Printed:31.01.2025