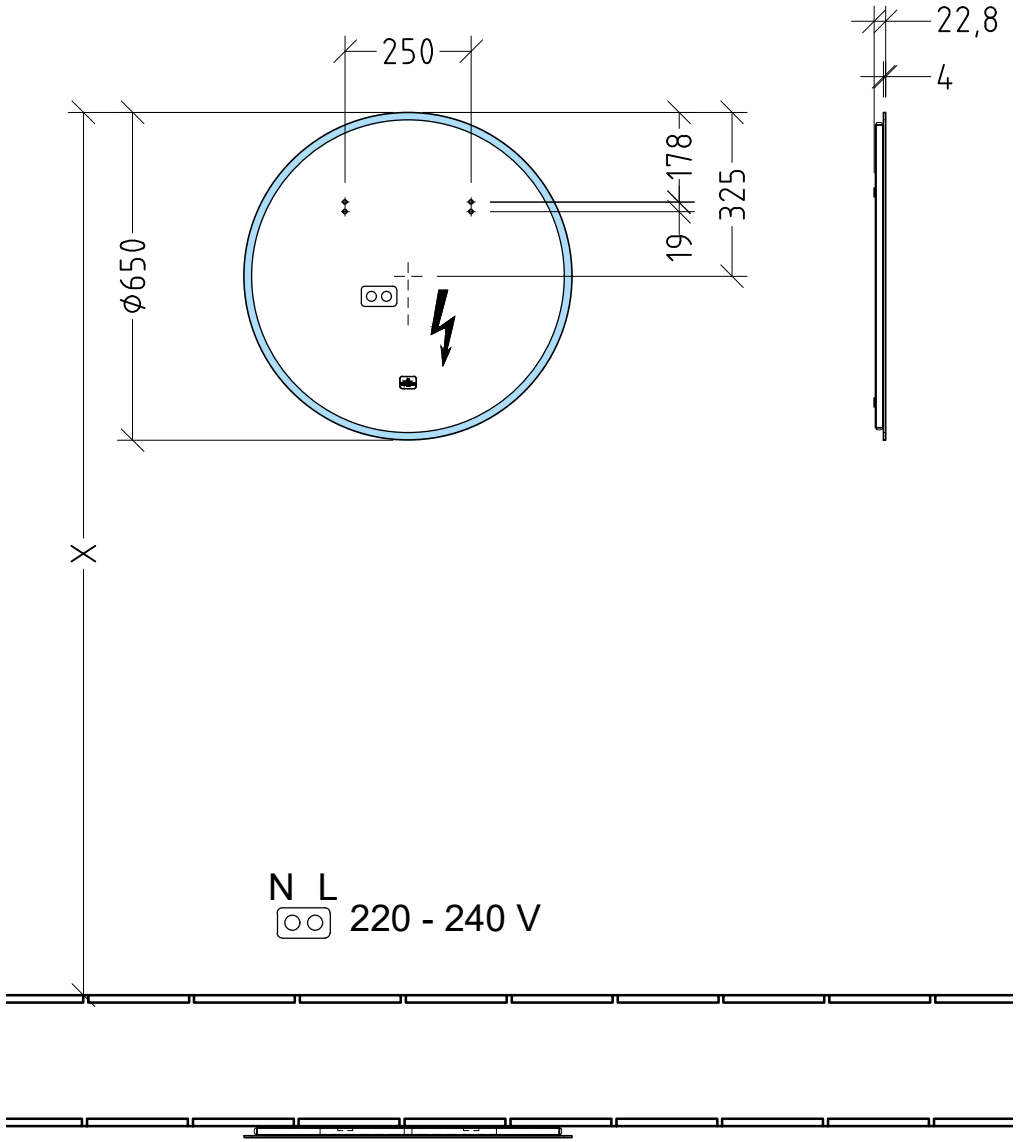

More to See Lite+ A4846500	Villeroy & Boch 1748
V01 / 16.01.2025	