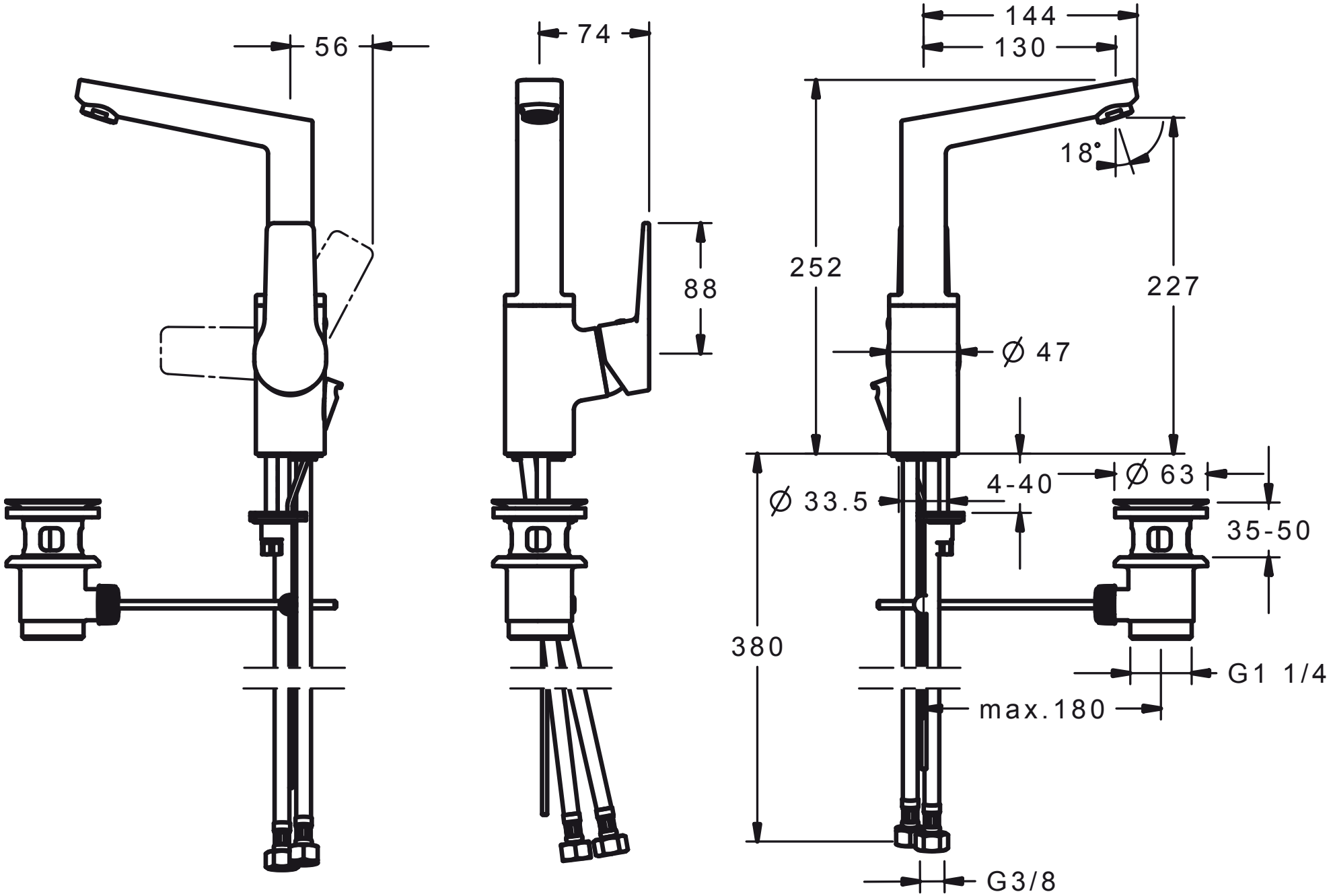
56
74
144
130
18°
252
227
88
Ø 47
4-40
Ø 63
Ø 33.5
35-50
380
G1 1/4
max.180
G3/8