Data Sheet | Item Number: 757-285/000-005

M12 sensor/actuator box; 8-way; 5-pole; 5 m

https://www.wago.com/757-285/000-005



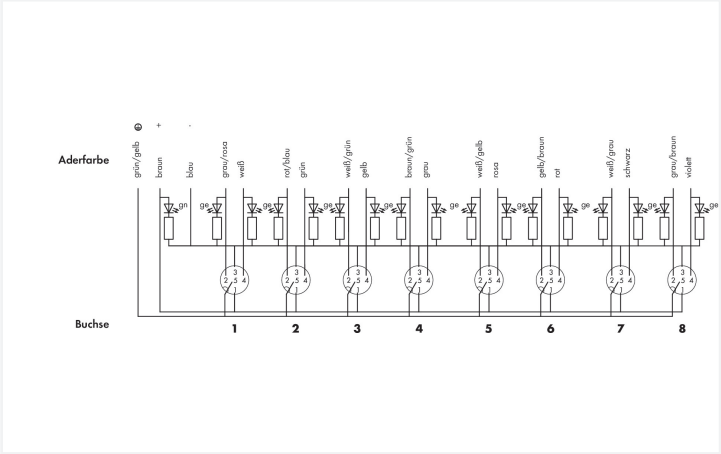

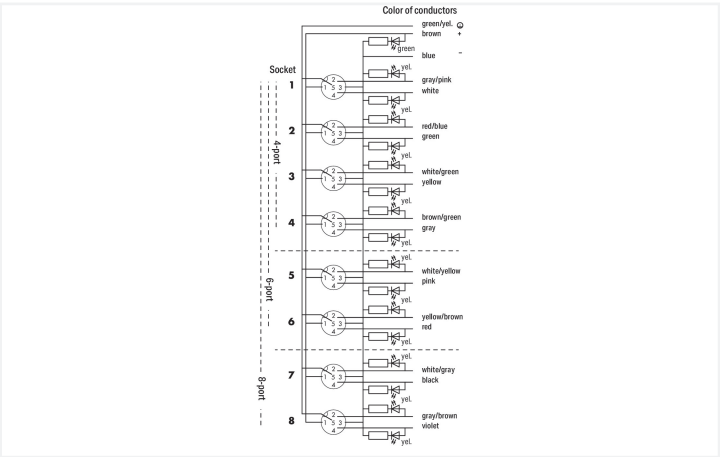

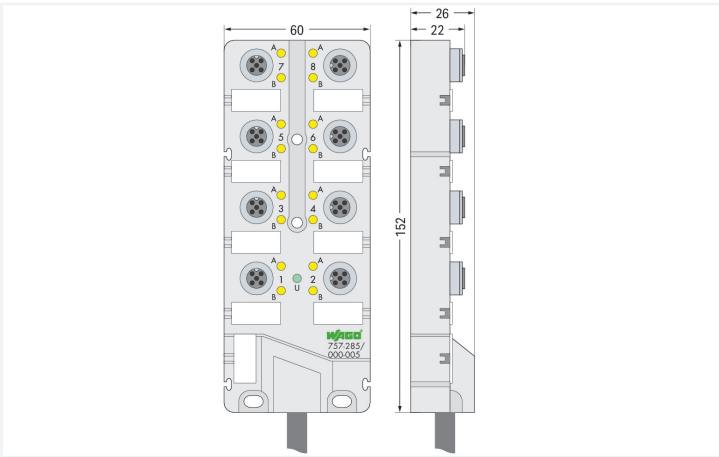

- M12 sensor/actuator box, 8-way
- 5-pole (2 signals per contact)
- Cable length: 5, 10 and 25 m
- Green LED operating indicator
- Yellow LED status indicator
- incl. markers (10 pcs)
- incl. M12 protective caps (2 pcs)

Technical data	
Contact resistance (max.)	0.01 Ω
Supply voltage	10 … 30 VDC; Rated voltage: 32 V ~ rms
Current carrying capacity (signal connections)	2 A
Current carrying capacity (supply connections)	9 A
Rated value of electrical isolation	500 V
Functionally separated potential groups	Kontakt/Kontakt
Insulation resistance	>10^9 Ω
Signal characteristics	PNP
Indicators	LED (A, B) yellow: Signal status (2 x per contact); LED (U) green: Sensor/actuator box status

Connection Data

Connection technology: I/O	8 x M12 socket; 5-pole; incl. ground
Connection technology: trunk cable	1 x Fixed connecting cable
Length of connection cable	5 m
Strip length	100 mm / 3.94 inches
Wire colors	white, gray/pink, green, red/blue, yellow, white/green, gray, brown/green, pink, white/yellow, red, yellow/brown, black, white/gray, purple, gray/brown, green/yellow, brown, blue
Cable design	Wire cross-section: 0.34 mm²; Wire cross-section: 1 mm²

Physical data

Width	60 mm / 2.362 inches
Height	26 mm / 1.024 inches
Depth	152 mm / 5.984 inches

Mechanical data

Mounting type	Screw mount
Weight	949 g

Material data

Housing material	PA 66 (UL 94 V0); RAL 7035; silicon and halogen free
Halogen-free	Yes
Bending radius	10 x cable diameter (min.) for flexible application
Material properties of the connections	Contact: CuSn, nickel base-coat plating and 0.8 µm gold-plated; Threaded bush: die-cast Zn, nickel-plated; Seal: Viton; 50 mating cycles
Sheath material	PUR
Sheathed cable color	black
Encapsulation	Fully encapsulated with conformal coating (UL 94 V0)

Environmental requirements

Ambient temperature (operation)	-25 … +80 °C
Ambient (operating) temperature (dynamic)	-5 … +80 °C
Ambient (operating) temperature (static)	-40 … +90 °C
Protection type	IP68
Note on protection type	72 hours at a depth of 1 meter underwater per EN 60529 in the fully locked position with its plugs or protective caps
Pollution degree	3 per VDE 0110
Vibration resistance	Per IEC 60068-2-6
Shock resistance	per IEC 60068-2-27

Commercial data

PU (SPU)	1 pcs
Packaging type	Box
Country of origin	DE
GTIN	4045454028480
Customs tariff number	85366990990

 Continued on next page

Product Classification

UNSPSC	39121421
eCl@ss 10.0	27-44-01-08
eCl@ss 9.0	27-44-01-08
ETIM 9.0	EC002585
ETIM 10.0	EC002585
ECCN	NO US CLASSIFICATION

Environmental Product Compliance

RoHS Compliance Status	Compliant,With Exemption
RoHS Exemption	6(c)
SCIP notification number (Austria)	caab85d8-eef8-4ed2-920e-8b34351b7adb
SCIP notification number (Belgium)	8221fd5d-eb75-4c5b-8d01-1be440bccd12
SCIP notification number (Bulgaria)	ec1d6709-75eb-450d-8221-43bcb6dcb9e2
SCIP notification number (Czech Republic)	8ce530d0-60ac-4019-83f1-00dff52cde0e
SCIP notification number (Denmark)	4ca371b6-b526-48c7-b4c5-b999697b77bc
SCIP notification number (Finland)	bb13dd33-185a-4b3f-9a0a-dd729e22364d
SCIP notification number (France)	8891170a-4063-423e-be0e-342d53cf9d55
SCIP notification number (Germany)	e99eab38-8d2b-44d3-97fa-2ab39046f234
SCIP notification number (Hungary)	c6d927f2-06b1-4124-bd73-029d8a012a98
SCIP notification number (Italy)	fc11b03d-a5d4-40a5-801f-e8d1c0f425bc
SCIP notification number (Netherlands)	c9fda8f7-4a53-4b80-93ef-7b3ff8214e79
SCIP notification number (Poland)	4ee93f4c-e1b3-4ba0-91d5-024c4d79754e
SCIP notification number (Romania)	3e5aa75c-eed1-48f1-8c84-b4d9e8a215b4
SCIP notification number (Sweden)	53d4229b-b5b6-460e-92a7-e9b6ef7354e6

Approvals / Certificates

General approvals

Approval	Standard	Certificate Name
UL UL International Germany GmbH (ORDINARY LOCATIONS)	UL 508	E175199 Sec.5

Downloads

Environmental Product Compliance

Compliance Search

Environmental Product Compliance
757-285/000-005

Documentation

System Description

Sensor/Actuator Boxes – General Product Information	pdf 428.34 KB	

CAD/CAE-Data

CAD data

2D/3D Models 757-285/000-005	

CAE data

EPLAN Data Portal 757-285/000-005	
WSCAD Universe 757-285/000-005	
ZUKEN Portal 757-285/000-005	

1 Compatible Products

1.1 Optional Accessories

1.1.1 Cover

1.1.1.1 Cover



Item No.: 756-8102
M12 protective cap; for unused sockets

1.1.2 Installation

1.1.2.1 Intermediate plate



Item No.: 757-080
Spacer module for sensor/actuator box; 8-way

1.1.3 Marking

1.1.3.1 Marking device



Item No.: 210-110
Fiber-tip pen

 Continued on next page

1.1.3.2 Marking strip



Item No.: 757-011
Marker card; not stretchable; snap-on type