Technical data sheet

GESRA7/10 service outlet with handle clamp

Item number: 7405544



Service outlet with handle clamp for up to 10 individual Modul 45 devices in 2 UT3 and one UT4 universal support, use in duct systems and system floors for indoor use.

Cord outlet made from polyamide RAL 9011.

10 mm floor covering recess in hinged cover can be reduced to 5 mm using enclosed pressboard filler.
Up to 7 installation devices with 50 mm central plate can be inserted.

AIG Cast aluminium

Master data

Item number	7405544
Type	GESRA7 10U
Description 1	Service outlet
Description 2	for universal mounting
Manufacturer	OBO
Dimension	Ø294x71
Material	Cast aluminium
Smallest sales unit	1
Unit of quantity	Piece
Weight	206.5 kg
Weight unit	kg/100 pc.
CO2 Footprint (GWP) Cradle-to-Gate	1,588 kg CO2e / 1 Piece

Technical data sheet

GESRA7/10 service outlet with handle clamp

Item number: 7405544

Dimensions

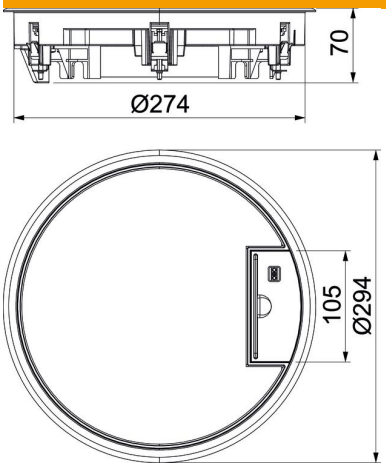

Technical data

Number of installable devices	10
Number of mounting boxes	3
Cover version	Round
Cable outlet version	Swivellable cord outlet
Floor covering protection frame	yes
Floor care	Dry
Seal installation option	no
Floor height, min.	78 mm
Suitable for raised floor installation	yes
Suitable for screed-covered underfloor ducts	yes
Suitable for cavity floor installation	yes
Suitable for wet care	no
Suitable for underfloor box	350
Suitable for underfloor ducts	yes
Device support to accept mounting boxes	yes
With floor covering recess	yes
Nominal size for device installation units	R7
Frame version	Carpet protection frame
ROHS-conformant	Exempt
Protection rating (IP) when used	IP20
Protection rating (IP) when unused	IP40
Protection rating IK code	IK10
Heavy-duty version	no
Clamping range D, max.	37 mm
Clamping range D, min.	15 mm
Installation system type	UT3 / UT4
Vertical load, large area	to 10,000 N
Vertical load, small area	to 3,000 N
Approvals	VDE

Technical data sheet

GESRA7/10 service outlet with handle clamp

Item number: 7405544

Technical data

Opening mechanism	Handle
Floor covering thickness	5 mm
Floor covering thickness max.	10 mm