Technical data sheet

Connector for suspended mounting

Item number: 7214715

Connecting fitting for using the fire protection duct BSKP 0406 as a suspended variant. The set includes 2 connectors and fastening and conncting screws.

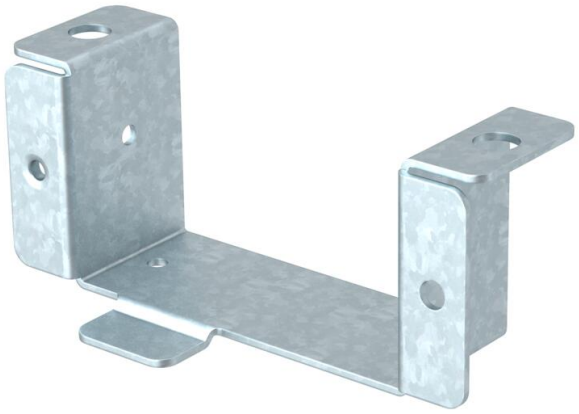

St	Steel
FS	Strip galvanised

Master data

Item number	7214715
Type	BSKP03-V0406
Description 1	Connection set
Description 2	for BSKP03-K0406
Manufacturer	OBO
Colour	zinc
Material	Steel
Surface	Strip galvanised
Surface standard	DIN EN 10346
Smallest sales unit	1
Unit of quantity	Piece
Weight	22 kg
Weight unit	kg/100 pc.
CO2 Footprint (GWP) Cradle-to-Gate	1,6581 kg CO2e / 1 Piece

Technical data sheet

Connector for suspended mounting

Item number: 7214715

Dimensions

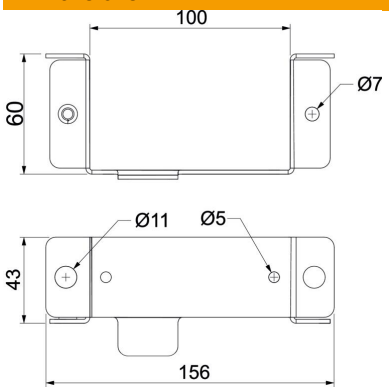

Dimension H	60 mm

Technical data

Type of accessory	Miscellaneous
ROHS-conformant	yes