META Wall-mounted single-lever basin mixer with individual rosettes - Brushed Platinum

36 862 660 Product version from 7/1/2023

- 90° spout
- 190mm projection
- fixed spout
- circular, air-enriched flow
- hole diameter spout 37 mm
- hole diameter single-lever mixer 57 mm
- rosette for spout Ø 55mm
- rosette for mixer Ø 78mm
- max. flow 5.7 l/min
- lead-free
- This product can help a building meet the requirements of Green Building Rating Systems, e.g. LEED®, BREEAM®, DGNB
- WRAS

Brushed Platinum	36 862 660-06
Chrome	36 862 660-00
Dark Chrome	36 862 660-19
Light Gold (PVD)	36 862 660-26
Brushed Light Gold (PVD)	36 862 660-27
Matte Black	36 862 660-33
Brushed Gold (PVD)	36 862 660-37
Brushed Dark Brass (PVD)	36 862 660-39
Brushed Bronze (PVD)	36 862 660-42
Brushed Dark Bronze (PVD)	36 862 660-43
Brushed Chrome	36 862 660-93
Brushed Dark Platinum	36 862 660-99

Required miscellaneous

	Concealed wall-mounted single-lever mixer - ●min. recess depth 75 mm ●max. recess depth 95 mm ●mixer can be placed above, to the left or to the right of the spout.	35 860 970 90

META Wall-mounted single-lever basin mixer with individual rosettes - Brushed Platinum

36 862 660 Product version from 7/1/2023

mm [inches]

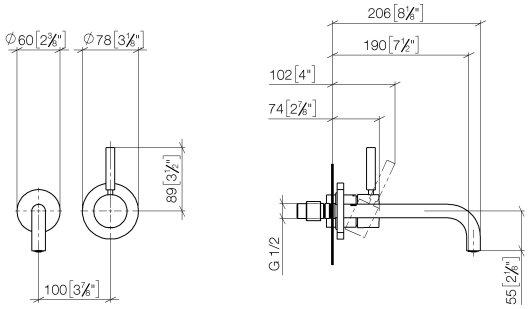

Flow rate chart

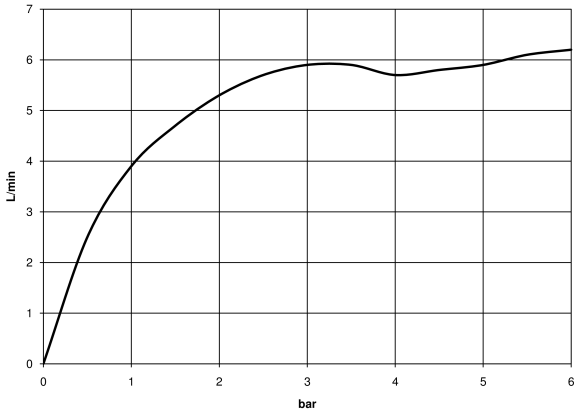

Codes & Standards

DIN 4109	ISO 3822	Scottish Water Byelaws	UK Water Supply Regulations

Ü-Zeichen

36 862 660 Product version from 7/1/2023

Certificates and sustainability

LGA_29	WRAS_2107	EPD-DOR-20230287-IBA1-EN Environmental.product-declarat

META Wall-mounted single-lever basin mixer with individual rosettes - Brushed Platinum

36 862 660 Product version from 7/1/2023

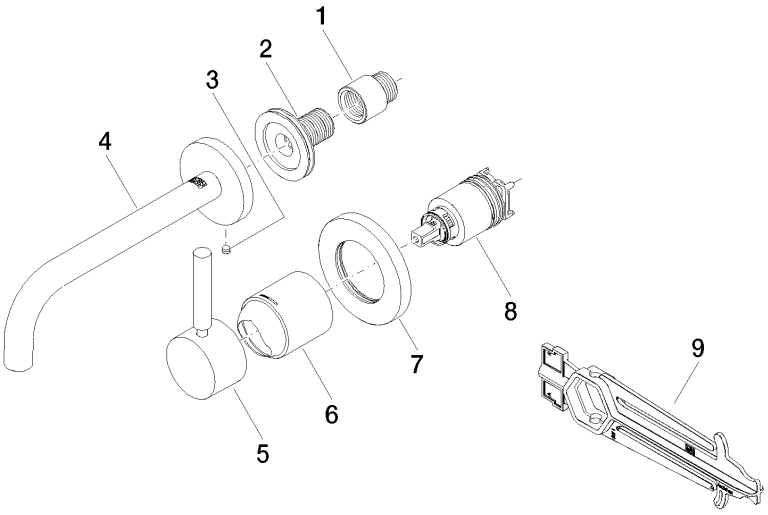

Spare parts list

No.	Item Number	Name	Quantity used	Delivery time
9	90 30 09 064 00 90	Spanner for cartridge nut -	1.00	14
7	90 27 62 011 00-06	Cover Ø 78 x Ø 45,7 x 9 mm - Brushed Platinum	1.00	20
1	09 24 03 072 10 90	Extension 1/2" x 20 mm -	1.00	14
6	09 11 02 288-06	Cover Ø 45 x 55 mm - Brushed Platinum	1.00	20
8	90 15 05 064 01 90	Single-lever mixer cartridge with adapter plate incl. installation spanner Ø 35 mm x 58,6 mm -	1.00	-
	Spare part can no longer be ordered, please order the replacement item			
	9015050460190	Single-lever mixer cartridge with cartridge insert , torque wrench Ø 35 mm x 58,6 mm -		
5	90 20 66 007 00-06	Handle Lever 52 x 35 x 117 mm - Brushed Platinum	1.00	20
2	90 24 03 280 00 90	Connection -	1.00	14
4	90 28 22 351 00-06	Spout for washstand wall mounting 190 mm, 5,68 l/min. - Brushed Platinum	1.00	20
3	09 31 11 148 90	Mounting Threaded pin with hexagon socket with point M5 x 4 mm -	1.00	14

We reserve the right to change designs, product range and technical specifications without prior notice.
More information can be found at: www.dornbracht.com +49 (0) 2371 8899 900 mail@dornbracht.com