mm [inches]

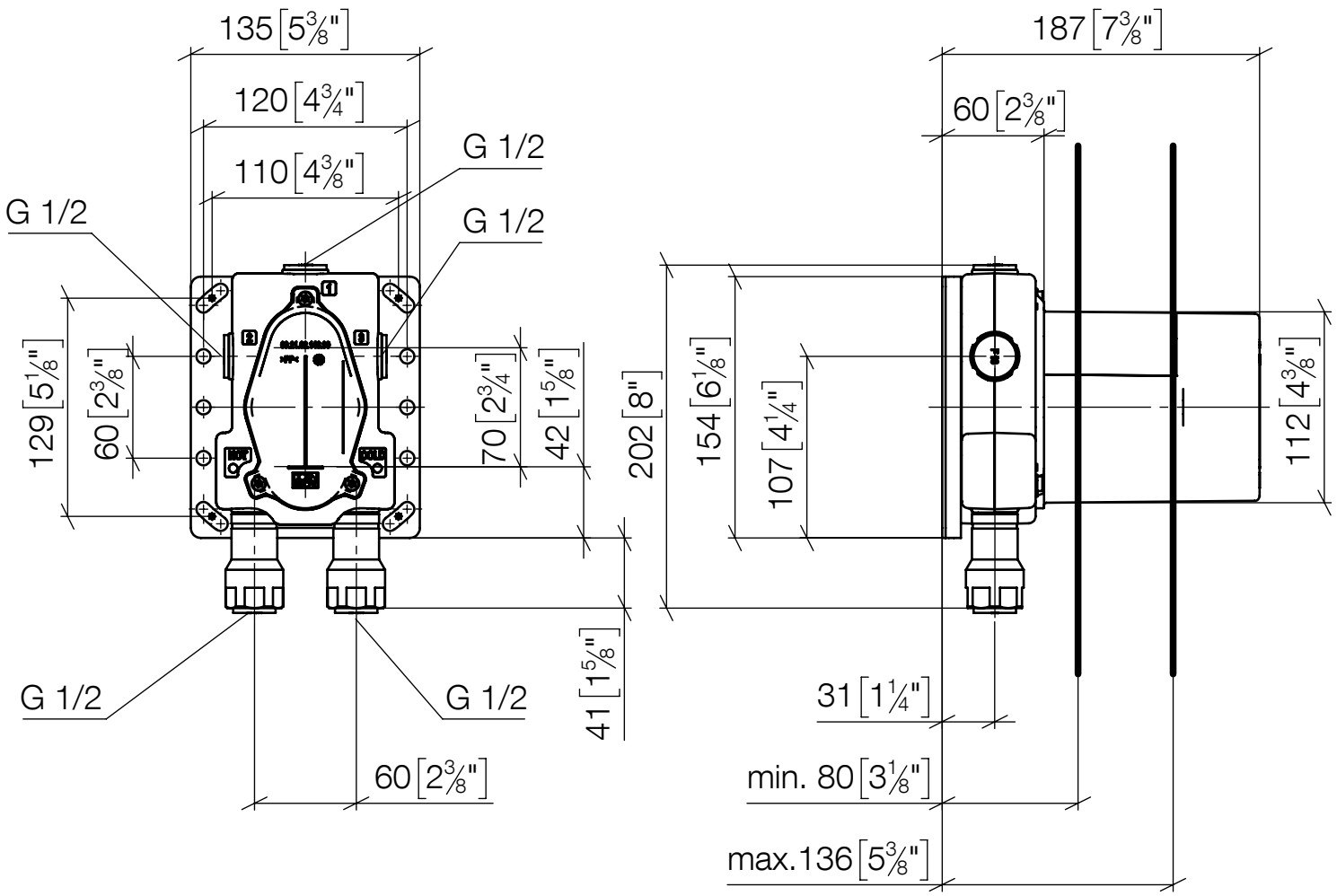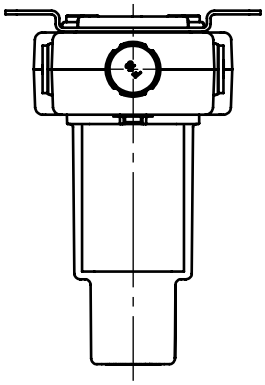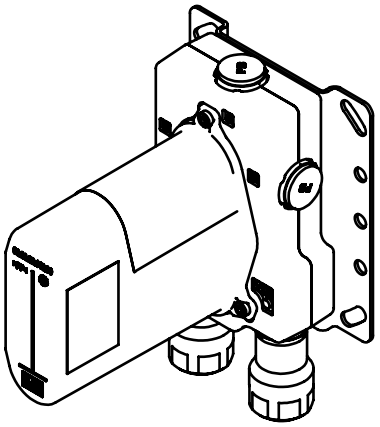
135 [5 3/8"]
120 [4 3/4"]
110 [4 3/8"]
G 1/2
G 1/2
G 1/2
129 [5 1/8"]
60 [2 3/8"]
70 [2 3/4"]
42 [1 5/8"]
202 [8"]
41 [1 5/8"]
G 1/2
G 1/2
60 [2 3/8"]
187 [7 3/8"]
60 [2 3/8"]
154 [6 1/8"]
107 [4 1/4"]
112 [4 3/8"]
31 [1 1/4"]
min. 80 [3 1/8"]
max.136 [5 3/8"]