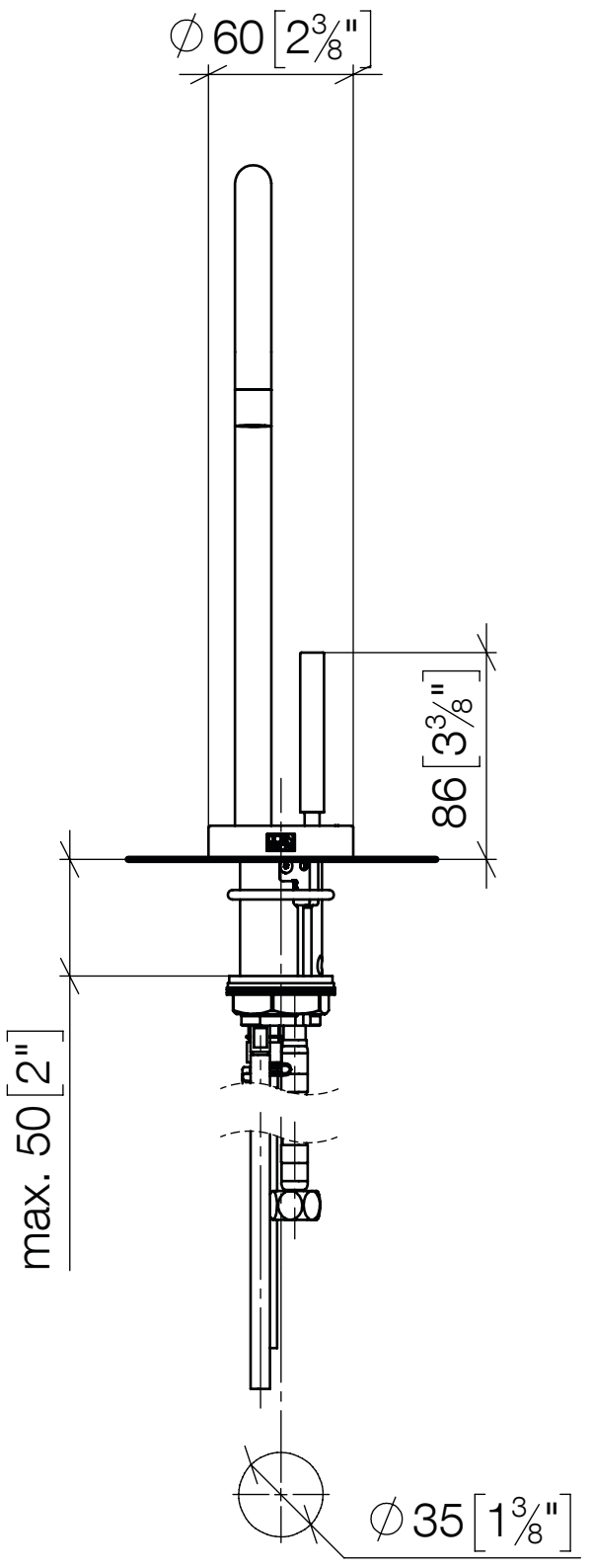
∅ 60 [2 3/8"]
86 [3 3/8"]
max. 50 [2"]
∅ 35 [1 3/8"]

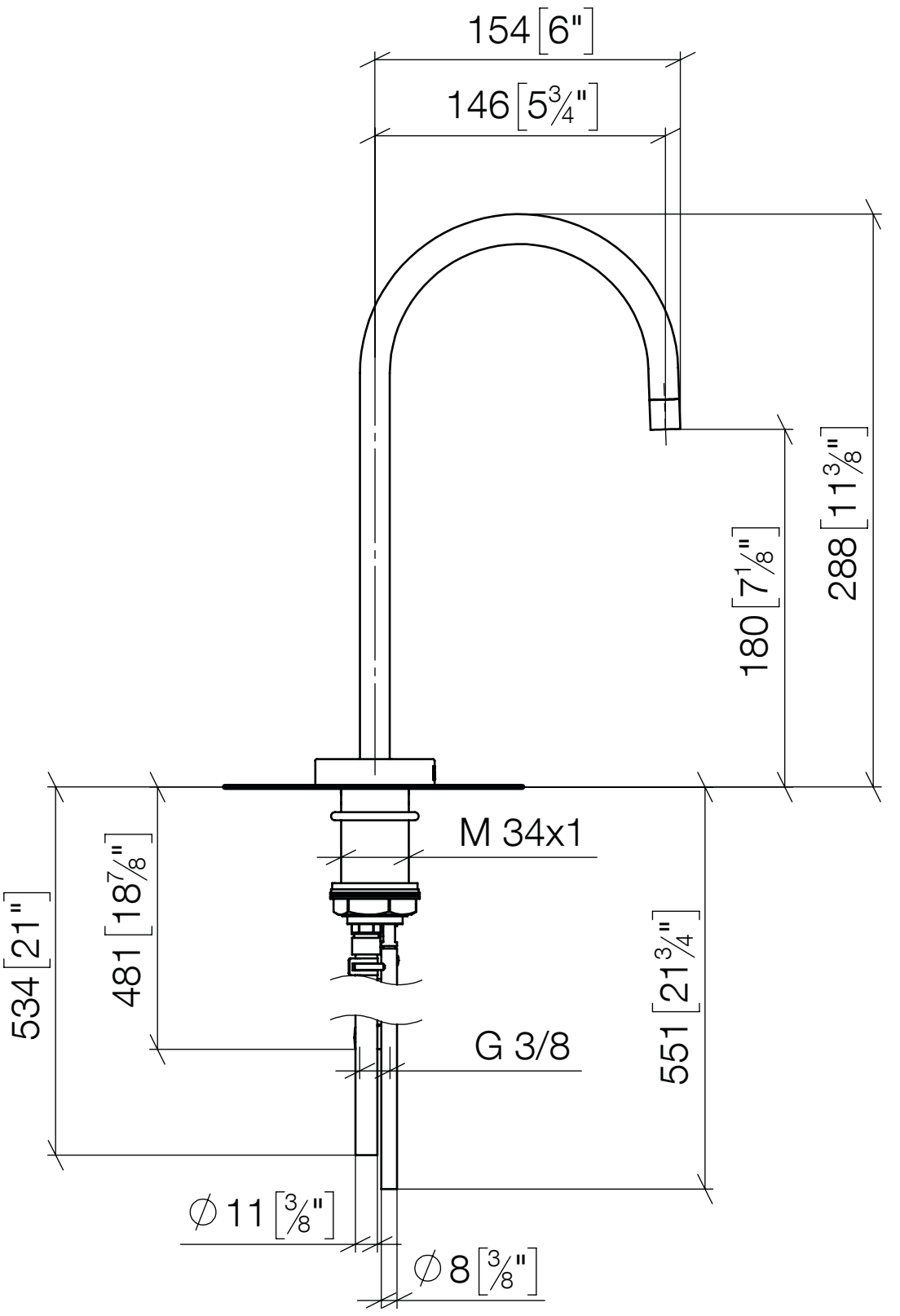
154 [6"]
146 [5 3/4"]
288 [11 3/8"]
180 [7 1/8"]
M 34x1
534 [21"]
481 [18 7/8"]
551 [21 3/4"]
G 3/8
∅ 11 [3/8"]
∅ 8 [3/8"]