Motion detector M42LR, 230 V, 32-37 m, IP54, for surface mounting, white

353-702111

4 year warranty

Bluetooth

230 V | stand-alone | IP54 | N.O., potential-free | 20 lx – 2,000 lx | 360° | ø 37 m from a height of 3 m

2 m – 3.5 m | surface-mounting | Bluetooth® Low Energy

This motion detector is a 1-channel, stand-alone detector with a large detection range for automatic lighting control. It is designed for surface mounting and has an IP54 protection degree. The detector's settings can be modified using the Niko detector tool app and 2-way Bluetooth® communication between a smartphone and the detector.

Colour: white

Compatible secondary detectors:

Compatible master detectors:

Compatible controls:

This article is protected by at least one patent (or patent application). For more info on patents, see www.niko.eu/innovation.

- Surface mounting
- Quick cabling using screwless and easily accessible plug-in terminals
- User-friendly app for commissioning (iOS/Android)
- 2-way Bluetooth® communication ensures quick modification of settings and live feedback in the app
- Fitted with three PIR segments, each covering 120°
- Pre-configured functions:
- Robust potential-free relay
- Automatic lighting control can be overridden with a 230 V push button - different options available
- Settings and configuration can be locked with a PIN code
- Web based portal solution for backing up and exchanging configuration files

Detection range

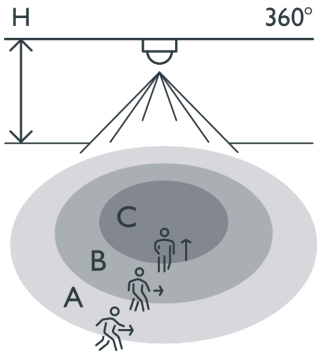

H	A Walking	B Across	C Towards
2.5 m	⌀ 32 m	⌀ 28 m	⌀ 10 m
3.0 m	⌀ 37 m	⌀ 30 m	⌀ 8 m
3.5 m	⌀ 48 m	⌀ 42 m	⌀ 8 m

Measured according to EN/IEC63180

- IP54 protection degree

Technical features

Configuration	stand-alone
Input voltage	230 Vac
Detector output	230 V (ON/OFF)
Switch-off delay	pulse, 15 sec – 7,200 sec, ∞
Maximum power consumption	0.2 W
Maximum MCB rating	16 A (limited by national installation rules)
Detection angle	360 °
Detection range (PIR)	ø 37 m from a height of 3 m
Minimum ambient temperature	-25 °C
Maximum ambient temperature	+40 °C
Mounting method	surface mounting
Mounting height	2 m – 3.5 m
Colour	white
Colour RAL (approximately)	9010
Dimensions visible (HxWxD)	100 mm x 100 mm
Dimensions (HxWxD)	100 mm x 100 mm x 70.7 mm
Maximum range Bluetooth® (free field, depending on the device)	50 m
Operating frequency	2.4 GHz
Maximum radio frequency power	-2 dBm
Protection degree standalone	IP54
Impact resistance	IK04
Modification of settings	Niko detector tool app (iOS-Android) and 2-way Bluetooth® communication
Halogen-free	yes

Dimensions

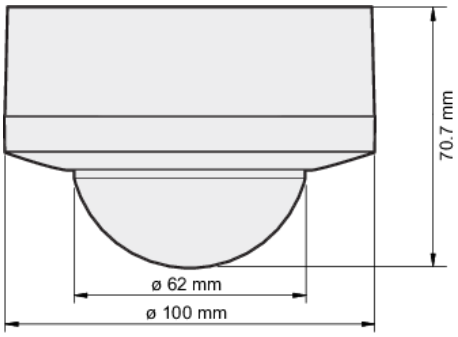
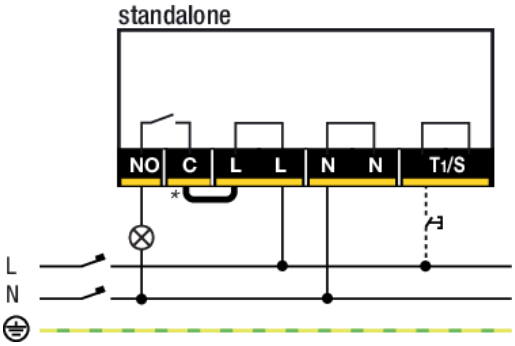
Wiring diagram