Technical data sheet

GESR9 service outlet with handle clamp

Item number: 7405532



Service outlet with handle clamp for up to 12 individual Modul 45 devices in 3 UT4 universal supports, use in duct systems and system floors for indoor use.

Up to 9 installation devices with 50 mm central plate can be inserted.

PA Polyamide

Master data

Item number	7405532
Type	GESR9 U 9011
Description 1	Service outlet
Description 2	for universal mounting
Manufacturer	OBO
Dimension	Ø324x61
Colour	Graphite black; RAL 9011
Material	Polyamide
Smallest sales unit	1
Unit of quantity	Piece
Weight	232 kg
Weight unit	kg/100 pc.
CO2 Footprint (GWP) Cradle-to-Gate	6,8207 kg CO2e / 1 Piece

Technical data sheet

GESR9 service outlet with handle clamp

Item number: 7405532

Dimensions

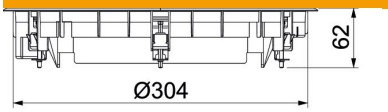

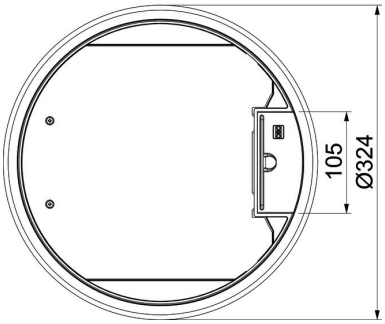

Length	324 mm
Width	324 mm
Height	62 mm

Technical data

Number of installable devices	12
Number of mounting boxes	3
Cover version	Round
Cable outlet version	Swivellable cord outlet
Floor covering protection frame	yes
Floor care	Dry
Floor height, min.	73 mm
Suitable for raised floor installation	yes
Suitable for screed-flush closed underfloor ducts	no
Suitable for screed-covered underfloor ducts	yes
Suitable for cavity floor installation	yes
Suitable for wet care	no
Suitable for underfloor box	350
Suitable for underfloor ducts	yes
Device support to accept mounting boxes	yes
With floor covering recess	yes
Nominal size for device installation units	R9
ROHS-conformant	yes
Protection rating (IP) when used	IP20
Protection rating (IP) when unused	IP40
Protection rating IK code	IK08
Heavy-duty version	no
Clamping range D, max.	30 mm
Clamping range D, min.	9 mm
Installation system type	MT4 / GB3
Vertical load, large area	to 5,000 N
Vertical load, small area	to 3,000 N
Approvals	VDE
Opening mechanism	Handle

Technical data sheet

GESR9 service outlet with handle clamp

Item number: 7405532

Technical data

Floor covering thickness	5 mm