Data Sheet | Item Number: 288-800

Constant voltage source; Input voltage: 24 VAC; 24 VDC output voltage; 3 A output current; in mounting carrier; 2,50 mm²

https://www.wago.com/288-800

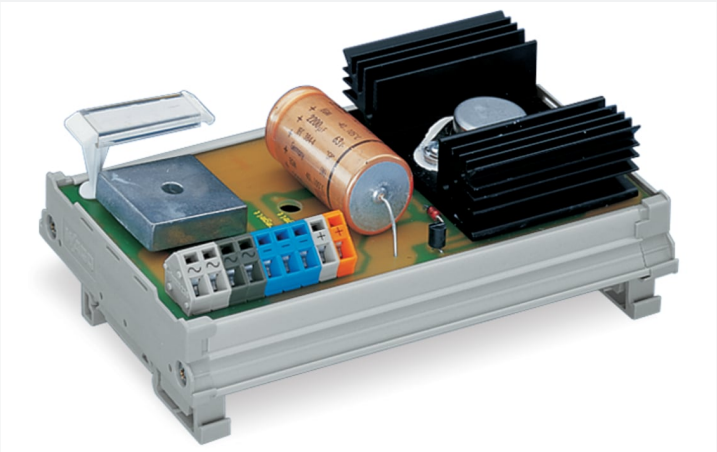

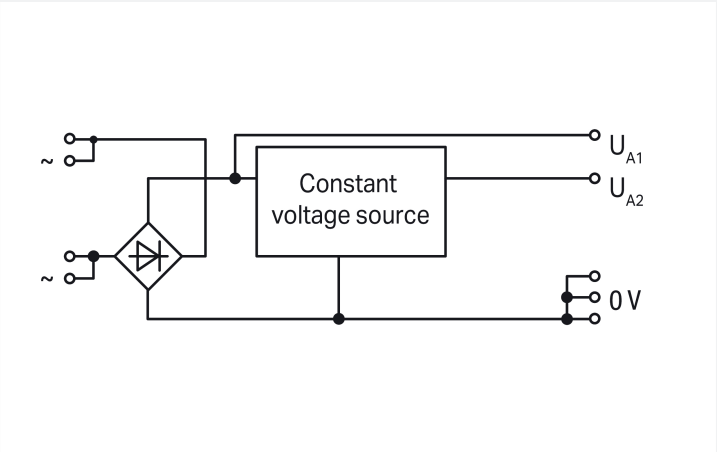

Technical data

Input

Nominal input voltage $U_{i\,nom}$	24 VAC
Input voltage range	±10 %

Output

Nominal output voltage $U_{o\,nom}$	24 VDC
Output voltage range	±10 %
Nominal output current $I_{o\,nom}$	3 A

Safety and protection

Protection class	III
Protection type	IP00; per EN 60529
Pollution degree	2
Series operation	No

Connection data

Connection technology	CAGE CLAMP®
WAGO connector	WAGO 236 Series
Solid conductor	0.08 … 2.5 mm² / 28 … 12 AWG
Fine-stranded conductor	0.08 … 2.5 mm² / 28 … 12 AWG
Strip length	5 … 6 mm / 0.2 … 0.24 inches
Note (conductor cross-section)	12 AWG: THHN, THWN

Physical data

Width	140 mm / 5.512 inches
Height	85 mm / 3.346 inches
Depth from upper-edge of DIN-rail	44 mm / 1.732 inches

Continued on next page

Mechanical data

Housing design	Mounting carrier
Mounting type	DIN-35 rail

Material data

Fire load	1.673 MJ
Weight	205.7 g

Environmental requirements

Ambient temperature (operation)	-25 … +40 °C

Standards and specifications

Conformity marking	CE

Commercial data

Product Group	6 (INTERFACE ELECTRONIC)
eCl@ss 10.0	27-04-07-01
eCl@ss 9.0	27-04-07-01
ETIM 9.0	EC002540
ETIM 8.0	EC002540
PU (SPU)	2 (1) pcs
Packaging type	Box
Country of origin	DE
GTIN	4050821347064
Customs tariff number	85044083900

Environmental Product Compliance

CAS-No.	1303-86-2 1317-36-8 19438-60-9 7439-92-1 79-94-7
REACH Candidate List Substance	2,2',6,6'-tetrabromo-4,4'-isopropylidenediphenol Diboron trioxide Hexahydro-4-methylphthalic anhydride Lead Lead monoxide
RoHS Compliance Status	Compliant,With Exemption
RoHS Exemption	7(a) 7(c)-I
SCIP notification number (Austria)	56ed3366-2603-4d74-b5ae-436d4548efda
SCIP notification number (Belgium)	c6ae3c3c-0f92-4f90-a62c-3eec9755e618
SCIP notification number (Bulgaria)	2f7951f6-97f2-4e21-897d-98e06ead9928
SCIP notification number (Czech Republic)	b7f76baf-2938-42e4-b6be-2017139dd114
SCIP notification number (Denmark)	6de8c7ae-3db1-4816-98b8-31b5cb6ce44a
SCIP notification number (Finland)	268879cf-7bea-4bbc-9a97-41c6c82d96bf
SCIP notification number (France)	e923d241-4c9f-4244-b166-53b71bb7da6b
SCIP notification number (Germany)	be6f46d4-db0e-45f5-96ed-201c5740edf1
SCIP notification number (Hungary)	a7dd7f7a-72d4-4ff0-8aad-7d927aa0b730
SCIP notification number (Italy)	8db6a533-7668-4eb7-93f8-7dde5ce5e82a
SCIP notification number (Netherlands)	a0399e8f-251e-4e51-b95d-270504ac99d1
SCIP notification number (Poland)	9988a1ec-9a3e-4021-966f-c381c29388c8
SCIP notification number (Romania)	f07427ac-1de2-407b-a23e-225aac1204b3
SCIP notification number (Sweden)	c1729e45-ba0e-4f80-81cf-c3912bb04a5b

 Continued on next page

Approvals / Certificates

General approvals

Approval	Standard	Certificate Name
EAC GZO Almaty Standart	TP TC 020/2011	EAC CoC 03081

Downloads

Environmental Product Compliance

Compliance Search

Environmental Product Compliance 288-800

Documentation

Bid Text

288-800	19.02.2019	xml 3.20 KB	
288-800	06.02.2015	doc 23.00 KB	

Instruction Leaflet

pdf 1246.19 KB	

CAD/CAE-Data

CAD data

2D/3D Models 288-800

CAE data

EPLAN Data Portal 288-800

WSCAD Universe 288-800

1 Compatible Products

1.1 Optional Accessories

1.1.1 Marking

1.1.1.1 Marking strip

Item No.: 709-196
Marking strips; for laser printer; translu-cent

Item No.: 210-831
Marking strips; on reel; 2.3 mm wide; plain; Self-adhesive; white

Item No.: 210-832
Marking strips; on reel; 3 mm wide; plain; Self-adhesive; white

Item No.: 709-177
Marking strips; on reel; 7.5 mm wide; not stretchable; plain; snap-on type; translu-cent

Item No.: 709-178
Marking strips; on reel; 7.5 mm wide; not stretchable; plain; snap-on type; white

 Continued on next page

1.1.2 Tool

1.1.2.1 Operating tool

Item No.: 210-720
Operating tool; Blade: 3.5 x 0.5 mm; with a partially insulated shaft; multicoloured