Data Sheet | Item Number: 855-301/150-501

Plug-in current transformer; Primary rated current: 150 A; Secondary rated current: 1 A; Rated power: 5 VA; Accuracy class: 1

https://www.wago.com/855-301/150-501

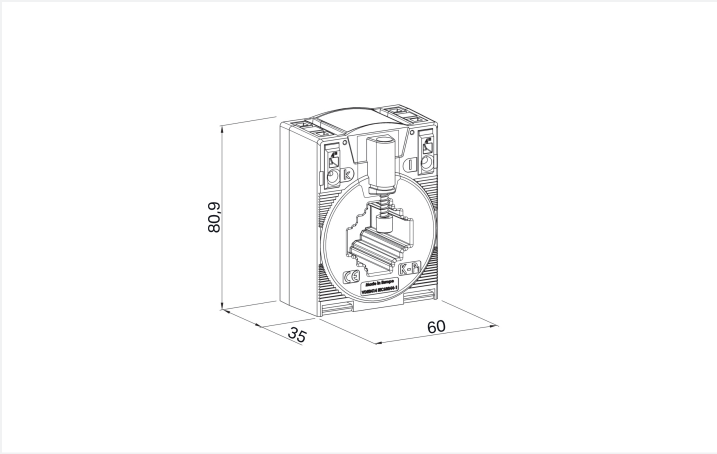

Dimensions in mm

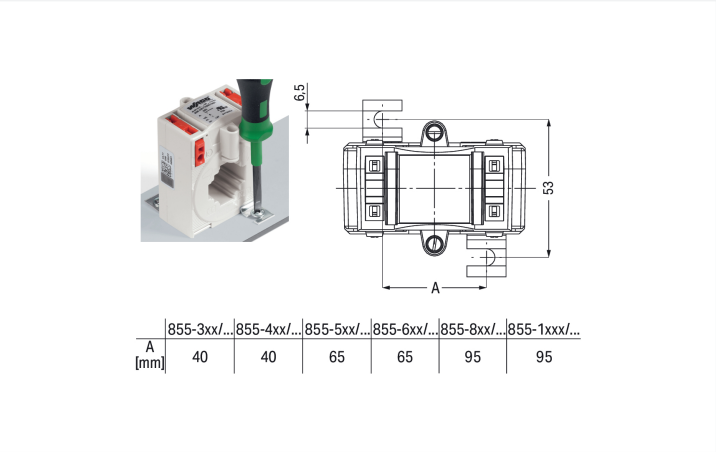

	855-3xx/...	855-4xx/...	855-5xx/...	855-6xx/...	855-8xx/...	855-1xxx/...
A [mm]	40	40	65	65	95	95

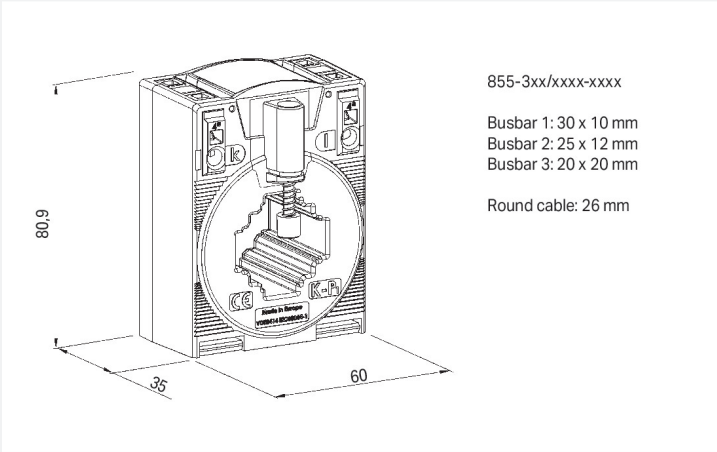

Dimensions in mm

Short description:

WAGO's plug-in current transformers (855 Series) are inductive, single-conductor current transformers. Due to the measurement principle used, these current transformers are exclusively designed for AC network applications.

Features:

- Screwless CAGE CLAMP® connection technology
- Several mounting options available
- Vibration- and shock-resistant
- High mechanical retention forces
- High current-carrying capacity
- Continuous overload of 120 % the nominal primary current
- Low-voltage current transformer for operating voltages up to max. 1.2 kV
- For 690 V power networks
- UL recognized components

Technical data

Input

Measured variable	Current

Input – current transformer

Rated continuous thermal current I_{cth}	1.2 x I_N
Rated short-time thermal current I_{th}	60 x I_N / 1 s (max. 100 kA / 1 s)
Overcurrent limiting factor	FS5 / FS10 (type dependent; see type plate inscription)
Rated frequency	50 … 60 Hz
Primary rated current	150 A

Output – current transformer

Secondary rated current	1 A
Rated power S_r	5 VA

Measurement Error

Accuracy class	1

Safety and protection

Test voltage	6 kVAC; 50 Hz; 1 min
Highest voltage for equipment U_m	1.2 kV_{rms}AC

Connection Data

Feedthrough for measurement conductor	Ø 26 mm

Connection 1

Connection technology	CAGE CLAMP®
Strip length	9 … 10 mm / 0.35 … 0.39 inches
Solid conductor	0.08 … 4 mm² / 28 … 12 AWG
Fine-stranded conductor	0.08 … 4 mm² / 28 … 12 AWG

Physical data

Width	60 mm / 2.362 inches
Height	80.9 mm / 3.185 inches
Depth	52 mm / 2.047 inches

Mechanical data

Mounting type	Closed current transformer Installation on mounting plate Mounting on DIN-rail via DIN-rail adapter Installation on round cable

Material data

Insulation class	E
Fire load	0 MJ
Weight	230 g

 Continued on next page

Environmental requirements

Ambient temperature (operation)	-5 … +50 °C
Ambient temperature (storage)	-25 … +70 °C
Operating altitude (max.)	1000 m

Standards and Specifications

Conformity marking	CE
Standards/specifications	EN 61869-1 EN 61869-2 UL: E356480

Commercial data

PU (SPU)	1 pcs
Packaging type	Box
Country of origin	HU
Customs tariff number	85043129900

Product Classification

UNSPSC	39121032
eCl@ss 10.0	27-21-09-02
eCl@ss 9.0	27-21-09-02
ETIM 9.0	EC002048
ETIM 10.0	EC002048
ECCN	NO US CLASSIFICATION

Environmental Product Compliance

RoHS Compliance Status	Compliant,No Exemption

Approvals / Certificates

General approvals

Approval	Standard	Certificate Name
EAC GZO Almaty Standart	TP TC 004/2011	EAC CoC 03082
UL Underwriters Laboratories Inc.	IEEE C57.13	E356480

Declarations of conformity and manufacturer's declarations

Approval	Standard	Certificate Name
EU-Declaration of Conformity WAGO GmbH & Co. KG	-	-
UK-Declaration of Conformity WAGO GmbH & Co. KG	-	-

 Continued on next page

Downloads

Environmental Product Compliance

Compliance Search

Environmental Product Compliance 855-301/150-501

Documentation

Bid Text

855-301/150-501	19.02.2019	xml 4.95 KB	
855-301/150-501	05.02.2015	doc 30.50 KB	

Instruction Leaflet

Aufsteck-Stromwandler	pdf 1438.11 KB	

CAD/CAE-Data

CAD data

2D/3D Models 855-301/150-501

CAE data

EPLAN Data Portal 855-301/150-501

WSCAD Universe 855-301/150-501

ZUKEN Portal 855-301/150-501

1 Compatible Products

1.1 Optional Accessories

1.1.1 Installation

1.1.1.1 Current transformer terminal block

Item No.: 2007-8876
Compact terminal block; for 3-phase current transformer circuit; 6,00 mm²; multicoloured

Item No.: 2007-8873
Compact terminal block; for current and voltage transformers; 6,00 mm²; multicoloured

Item No.: 2007-8874
Compact terminal block; for current and voltage transformers; 6,00 mm²; multicoloured

Item No.: 2007-8875
Compact terminal block; for current transformer circuit; 6,00 mm²; multicoloured

Item No.: 2007-8877
Compact terminal block; for current transformer circuit; 6,00 mm²; multicoloured

 Continued on next page

1.1.2 Mounting adapter

1.1.2.1 DIN-rail adapter

Item No.: 855-9900
Carrier rail adapter

1.1.2.2 Fast connection adapter

Item No.: 855-9910
Quick-mount kit

1.1.3 Signal conditioner

1.1.3.1 Current Signal Conditioner

Item No.: 857-551
Current signal conditioner; Current input signal; Current and voltage output signal; Digital output; Configuration via software; Supply voltage: 24 VDC; 6 mm module width

Item No.: 857-550
Current signal conditioner; Current input signal; Current and voltage output signal; Digital output; Configuration via software; Supply voltage: 24 VDC; 6 mm module width; 2,50 mm²

1.1.3.2 Power Measurement Module

Item No.: 2857-570/024-001
3-Phase Power Measurement Module; 3x277/480 V/1 A; Modbus RTU; Digital output; Configuration via software; Supply voltage: 24 VDC

1.1.4 Tool

1.1.4.1 Operating tool

Item No.: 210-720
Operating tool; Blade: 3.5 x 0.5 mm; with a partially insulated shaft; multicoloured

 Continued on next page

Installation Notes

Installation

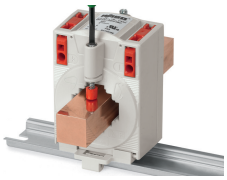

Installation on copper current bar

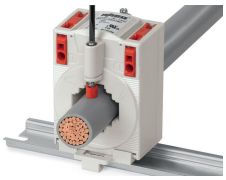

Installation on round cable

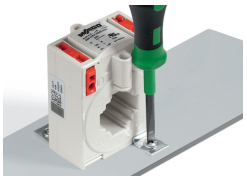

Installation on mounting plate

Mounting on DIN-rail via 855-9900 DIN-Rail Adapter

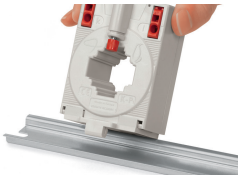

Snapping onto DIN-rail

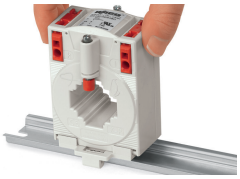

Snapping onto DIN-rail

Installation via 855-9910 Quick-Mount Kit

Conductor termination

Conductor termination – screwdriver actuation perpendicular to conductor entry

Conductor termination – screwdriver actuation parallel to conductor entry