Cover plate for the concealed WC cistern made by TeCe - Brushed Dark Platinum

SERIES-VARIOUS

12 660 979 Product version up to 5/27/2021

- cover plate 150 x 240 x 15 mm
- flush handle with rotary operation and two-volume technology (full flush/partial flush)

This product is compatible with the following TECE products:

- TECEprofil dry wall construction, article numbers:
- 9300300, 9300322, 9300301, 9300344, 9300309, 9300303, 9300388, 9300366, 9300102, 9300103, 9300329, 9300377, 9300378, 9400302, 9400303, 9400304, 9041335, 9041336, 9041337
- TECEbox wet wall construction, article numbers:
- 9370300, 9375300, 9371300

Brushed Dark Platinum	12 660 979-99
Chrome	12 660 979-00
Brushed Platinum	12 660 979-06
Platinum	12 660 979-08
Dark Chrome	12 660 979-19
Light Gold (PVD)	12 660 979-26
Brushed Light Gold (PVD)	12 660 979-27
Brushed Durabrass (23kt Gold)	12 660 979-28
Matte Black	12 660 979-33
Brushed Gold (PVD)	12 660 979-37
Brushed Dark Brass (PVD)	12 660 979-39
Brushed Bronze (PVD)	12 660 979-42
Brushed Dark Bronze (PVD)	12 660 979-43
Brushed Champagne (22kt Gold)	12 660 979-46
Champagne (22kt Gold)	12 660 979-47
Brushed Chrome	12 660 979-93

We reserve the right to change designs, product range and technical specifications without prior notice.
More information can be found at: www.dornbracht.com +49 (0) 2371 8899 900 mail@dornbracht.com

Cover plate for the concealed WC cistern made by TeCe - Brushed Dark Platinum

SERIES-VARIOUS

12 660 979 Product version up to 5/27/2021

mm [inches]

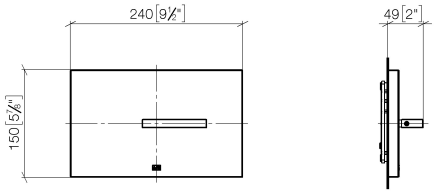

Cover plate for the concealed WC cistern made by TeCe - Brushed Dark Platinum

SERIES-VARIOUS

12 660 979 Product version up to 5/27/2021

Parts for other finishes can be found here: Chrome

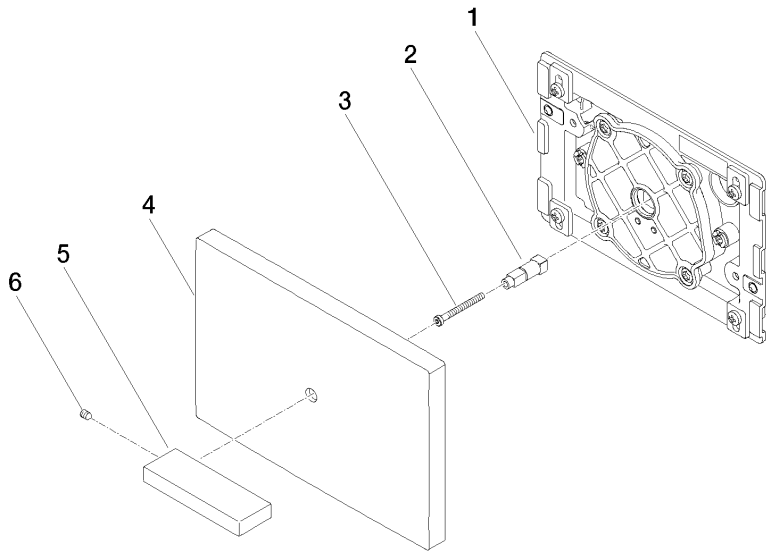

Spare parts list

No.	Item Number	Name	Quantity used	Delivery time
6	09 31 11 058 90	Mounting Threaded pin with hexagon socket with cup point M5 x 8 mm -	1.00	14
4	09 11 01 179-99	Cover 240 x 150 x 16 mm - Brushed Dark Platinum	1.00	-
	Spare part can no longer be ordered, please order the replacement item			
3	09 30 30 086 90	Mounting Cylinder head screw with hexagon socket Low profile M4 x 45 mm -	1.00	14
5	09 20 97 057-99	Handle for lever handle set 90 x 30 x 12 mm - Brushed Dark Platinum	1.00	40
1	04 28 01 053 00 90	Connection 210 x 140 x 25 mm -	1.00	14
2	09 18 20 038 90	Mounting Ø 9,9 x 35 mm -	1.00	14

We reserve the right to change designs, product range and technical specifications without prior notice.
More information can be found at: www.dornbracht.com +49 (0) 2371 8899 900 mail@dornbracht.com