Technical data sheet

Large washer, A2

Item number: 3403125



Washer of particularly large outer diameter. In the case of connections on the MS 41 mounting rail, we recommend the external diameter of 40 mm.

CE

A2	Stainless steel
2B	Bright, treated

Master data

Item number	3403125
Type	WS M8 D20 A2
Description 1	Fender plate
Manufacturer	OBO
Dimension	M8,Ø20mm
Material	Stainless steel
Surface Surface standard	Bright, treated
Smallest sales unit	100
Unit of quantity	Piece
Weight	0.24 kg
Weight unit	kg/100 pc.
CO2 Footprint (GWP) Cradle-to-Gate	0,0119 kg CO2e / 1 Piece

Dimensions

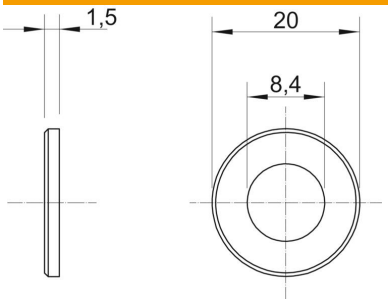

Plate thickness	0.06 in
Dimension D	0.79 in
Dimension d	0.33 in
Dimension d	8.4 mm
Dimension d max.	20 mm
Dimension d min.	20 mm
Dimension h	1.5 mm

Technical data sheet

Large washer, A2

Item number: 3403125

Technical data

Thread	M8
Halogen-free	no
Material thickness	1.5 mm
ROHS-conformant	yes