Technische Daten/ Technical Data

KLUDI LOGO
THERMOSTAT DUAL SHOWER SYSTEM
DN 15

Ref.: 6808239-00

Finishes:
39 matt black

Product description
Manufacturer KLUDI GmbH & Co. KG
Typ: KLUDI LOGO
THERMOSTAT DUAL SHOWER SYSTEM
Ref.: 6808239-00

thermostatic shower mixer
wall mounted
with ceramic shut-off valve 90°/90°
temperature handle with hot water safety at 40°C
shower outlet G1/2
protected against back flow
S-unions G1/2 x G3/4
with dirt-catcher sieve
with fixing material
height-adjustable hand shower holder
with horizontally and vertically adjustable pipe
for rigid wall mounting

hand shower 3 S
3 spray pattern
Volumen/booster/smoth
with cleaning system
connection G1/2
sieve seal

shower hose
plastic coated
with conical nuts
G1/2 x G1/2 x 1600mm

head shower 1 S
Ø 250mm
1 spray pattern
with cleaning system
connection G1/2
with ball joint
sieve seal

Produktabbildung/ Product picture

Maßzeichnung/ Dimensional drawing

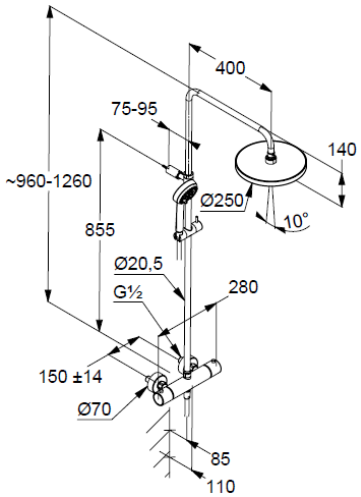
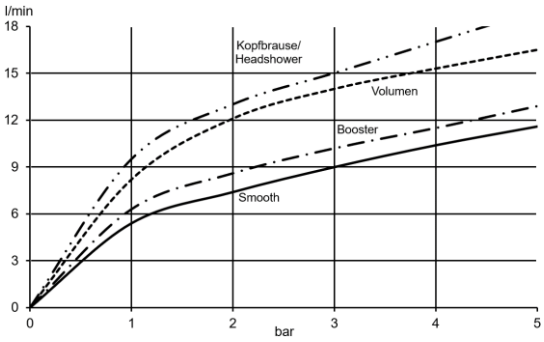
Durchfluss/ Flow rate