Technical data sheet

End piece SLT ESre2050

Item number: 6132302

End piece (right) as a fitting for the skirting trunking.
For a clean end to the trunking system. For attaching to the trunking ends.



PVC Polyvinylchloride

Master data

Item number	6132302
Type	SLT ESre2050 rws
Description 1	End piece right
Description 2	SL-T 20x50 9010
Manufacturer	OBO
Colour	Pure white; RAL 9010
Material	Polyvinylchloride
Smallest sales unit	10
Unit of quantity	Piece
Weight	0.705 kg
Weight unit	kg/100 pc.
CO2 Footprint (GWP) Cradle-to-Gate	0,04 kg CO2e / 1 Piece

Technical data sheet

End piece SLT ESre2050

Item number: 6132302

Dimensions

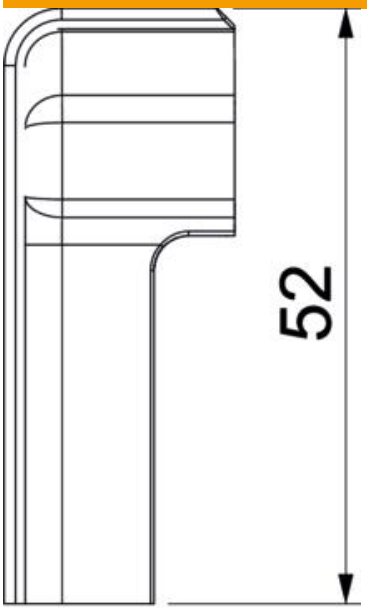

Length	30 mm
Width	20 mm
Height	52 mm

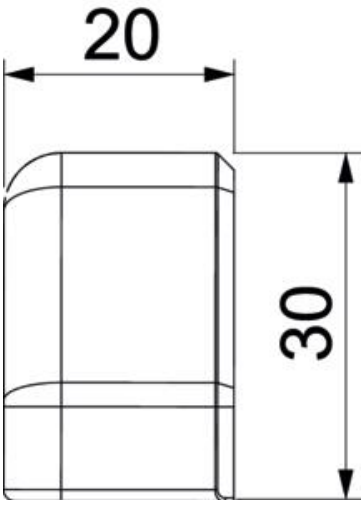

Technical data sheet

End piece SLT ESre2050

Item number: 6132302

Technical data

Version for	Right
Decoration	Without
Cover sealing lip	Without
Halogen-free	no
With carpet strip	yes
Protection rating	IP40
Protection rating IK code	IK06
Permitted temperature range, max.	60 °C
Permitted temperature range, min.	-5 °C
Pre-markings	no