Technical data sheet

Washer ISO 7093

Item number: 3402215

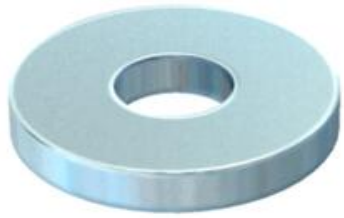

Washer of large outer diameter for universal use.

CE

St	Steel
G	Electrogalvanised

Master data

Item number	3402215
Type	WS M8 D28 G
Description 1	Washer
Manufacturer	OBO
Dimension	M8
Material	Steel
Surface	Electrogalvanised
Surface standard	EN ISO 19598 / EN ISO 4042
Smallest sales unit	100
Unit of quantity	Piece
Weight	1.1 kg
Weight unit	kg/100 pc.
CO2 Footprint (GWP) Cradle-to-Gate	0,034 kg CO2e / 1 Piece

Dimensions

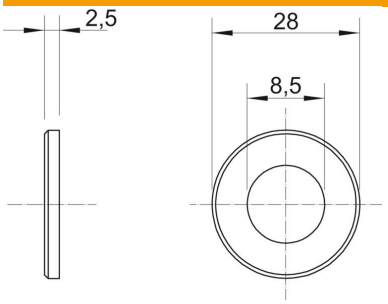

Plate thickness	0.1 in
Dimension D	1.1 in
Dimension d	0.33 in
Dimension d	8.5 mm
Dimension d min.	28 mm
Dimension h	2.5 mm

Technical data sheet

Washer ISO 7093

Item number: 3402215

Technical data

Thread	M8
Inner diameter	8.5 mm
Material thickness	2.5 mm
With toothing	no
ROHS-conformant	yes
Hole shape	Round