threaded shank with spout seals and escutcheon 55 x 55 x 9 mm - Brushed Champagne (22kt Gold)

SPARE PARTS

90 27 78 023 00

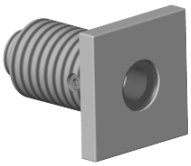

Brushed Champagne (22kt Gold)	90 27 78 023 00-46
Chrome	90 27 78 023 00-00
Brushed Platinum	90 27 78 023 00-06
Platinum	90 27 78 023 00-08
Dark Chrome	90 27 78 023 00-19
Brushed Durabrass (23kt Gold)	90 27 78 023 00-28
Brushed Bronze (PVD)	90 27 78 023 00-42
Champagne (22kt Gold)	90 27 78 023 00-47
Brushed Dark Platinum	90 27 78 023 00-99

threaded shank with spout seals and escutcheon 55 x 55 x 9 mm - Brushed Champagne (22kt Gold)

90 27 78 023 00

threaded shank with spout seals and escutcheon 55 x 55 x 9 mm - Brushed Champagne (22kt Gold)

90 27 78 023 00

threaded shank with spout seals and escutcheon 55 x 55 x 9 mm - Brushed Champagne (22kt Gold)

90 27 78 023 00

Parts for other finishes can be found here: Chrome

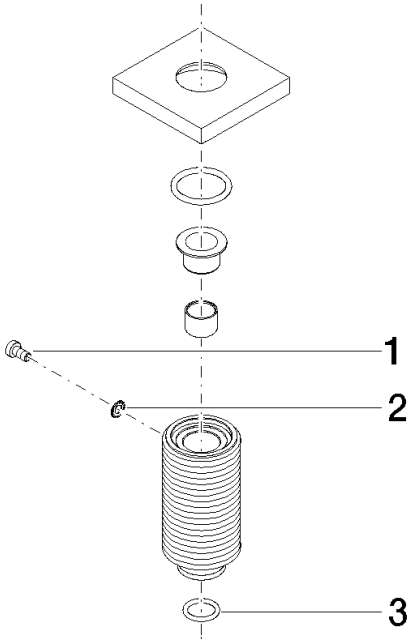

Spare parts list

No.	Item Number	Name	Quantity used	Delivery time
2	09 30 11 028 90	Mounting Serrated lock washer Ø 4,3 -	1.00	14
3	90 14 10 077 00 90	O-Ring EPDM 70 12,0 x 2,0 mm -	1.00	14
1	09 30 30 057 90	Mounting Cylinder head screw with hexagon socket with low profile M4 x 8 mm -	1.00	14

We reserve the right to change designs, product range and technical specifications without prior notice.
More information can be found at: www.dornbracht.com +49 (0) 2371 8899 900 mail@dornbracht.com