Technical data sheet

End piece SL ESre2070

Item number: 6132283

End piece (right) as a fitting for the skirting trunking.
For a clean end to the trunking system. For attaching to the trunking ends.



PVC Polyvinylchloride

Master data

Item number	6132283
Type	SL ESre2070 lgr
Description 1	End piece right
Description 2	SL 20x70 7035
Manufacturer	OBO
Colour	Light grey; RAL 7035
Material	Polyvinylchloride
Smallest sales unit	10
Unit of quantity	Piece
Weight	0.69 kg
Weight unit	kg/100 pc.
CO2 Footprint (GWP) Cradle-to-Gate	0,0257 kg CO2e / 1 Piece

Technical data sheet

End piece SL ESre2070

Item number: 6132283

Dimensions

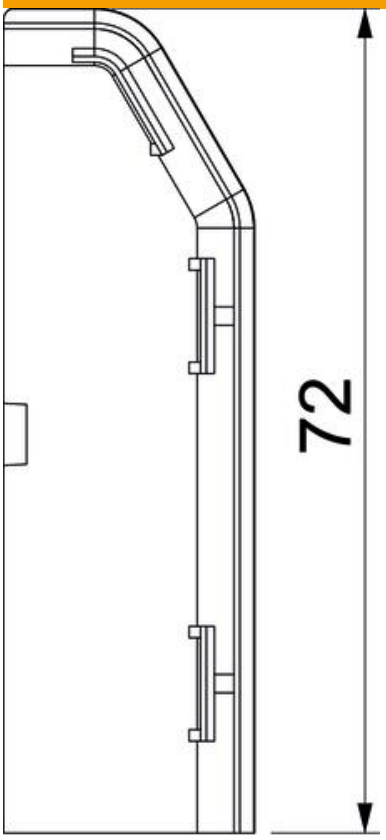

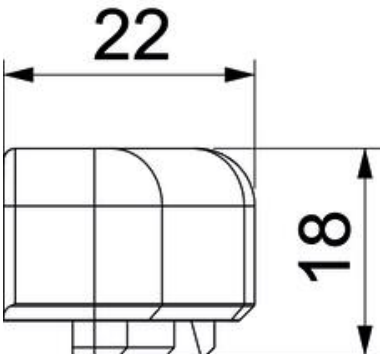

Length	22 mm
Width	18 mm
Height	72 mm

Technical data sheet

End piece SL ESre2070

Item number: 6132283

Technical data

Version for	Right
Decoration	Without
Cover sealing lip	Without
Halogen-free	no
With carpet strip	no
ROHS-conformant	yes
Protection rating	IP40
Protection rating IK code	IK06
Permitted temperature range, max.	60 °C
Permitted temperature range, min.	-5 °C
Pre-markings	no