Technical data sheet

Ceiling bracket FT

Item number: 6363903

Suspension bracket for cable support systems.



St Steel

FT Hot-dip galvanised

Master data

Item number	6363903
Type	AHB 100 FT
Description 1	Suspension bracket
Description 2	flat steel
Manufacturer	OBO
Dimension	B100mm
Colour	zinc
Material	Steel
Surface	Hot-dip galvanised
Surface standard	DIN EN ISO 1461
Smallest sales unit	1
Unit of quantity	Piece
Weight	54 kg
Weight unit	kg/100 pc.
CO2 Footprint (GWP) Cradle-to-Gate	1,2084 kg CO2e / 1 Piece

Technical data sheet

Ceiling bracket FT

Item number: 6363903

Dimensions

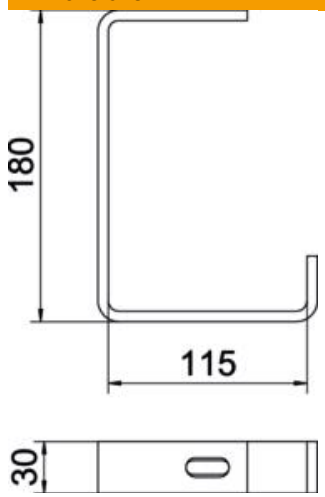

Length	30 mm
Width	127 mm
Height	180 mm
Dimension B	115 mm

Technical data

Version for	Suspension bracket (C clamp)
F in kN ceiling	0.6 kN
Maintain electrical functions	no
for width max.	100 mm
for width min.	100
Suitable for metric threaded rod	10
Suitable for mesh cable tray	no
Suitable for cable ladder	no
Suitable for cable tray	yes
Suitable for tray/ladder width	100 mm
Hole diameter	11 mm
Material thickness	6 mm
Tray fastening	Screw-on
ROHS-conformant	yes
Adjustable	no