Technical data sheet

Compressed air tap for industrial pole

Item number: 6290495



Tap to take off compressed air from the ISS industrial pole profile. The compressed air tap has a G 1/2 (ISO 228-1) threaded hole to accept a standard compressed air coupling. The unit can be mounted onto the pole profile using slot nuts and fastening screws. For the creation of an appropriate outlet for the compressed air a drilling template is supplied.

Alu Aluminium

Master data

Item number	6290495
Type	ISS160160DLA
Description 1	Compressed air tap
Description 2	for ISS, industry
Manufacturer	OBO
Dimension	152x50x15
Colour	Jet black; RAL 9005
Material	Aluminium
Smallest sales unit	1
Unit of quantity	Piece
Weight	30 kg
Weight unit	kg/100 pc.
CO2 Footprint (GWP) Cradle-to-Gate	3,9956 kg CO2e / 1 Piece

Technical data sheet

Compressed air tap for industrial pole

Item number: 6290495

Dimensions

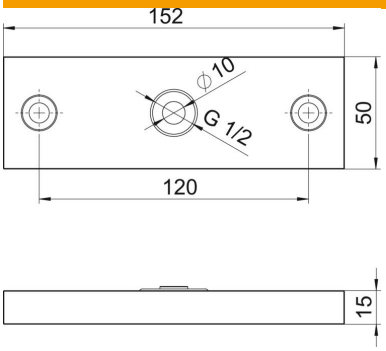

Length	152 mm
Width	50 mm
Height	15 mm

Technical data

Version for	Miscellaneous
Halogen-free	yes
Protection rating	IP30
Protection rating IK code	IK10
Permitted temperature range, max.	60 °C
Permitted temperature range, min.	-25 °C