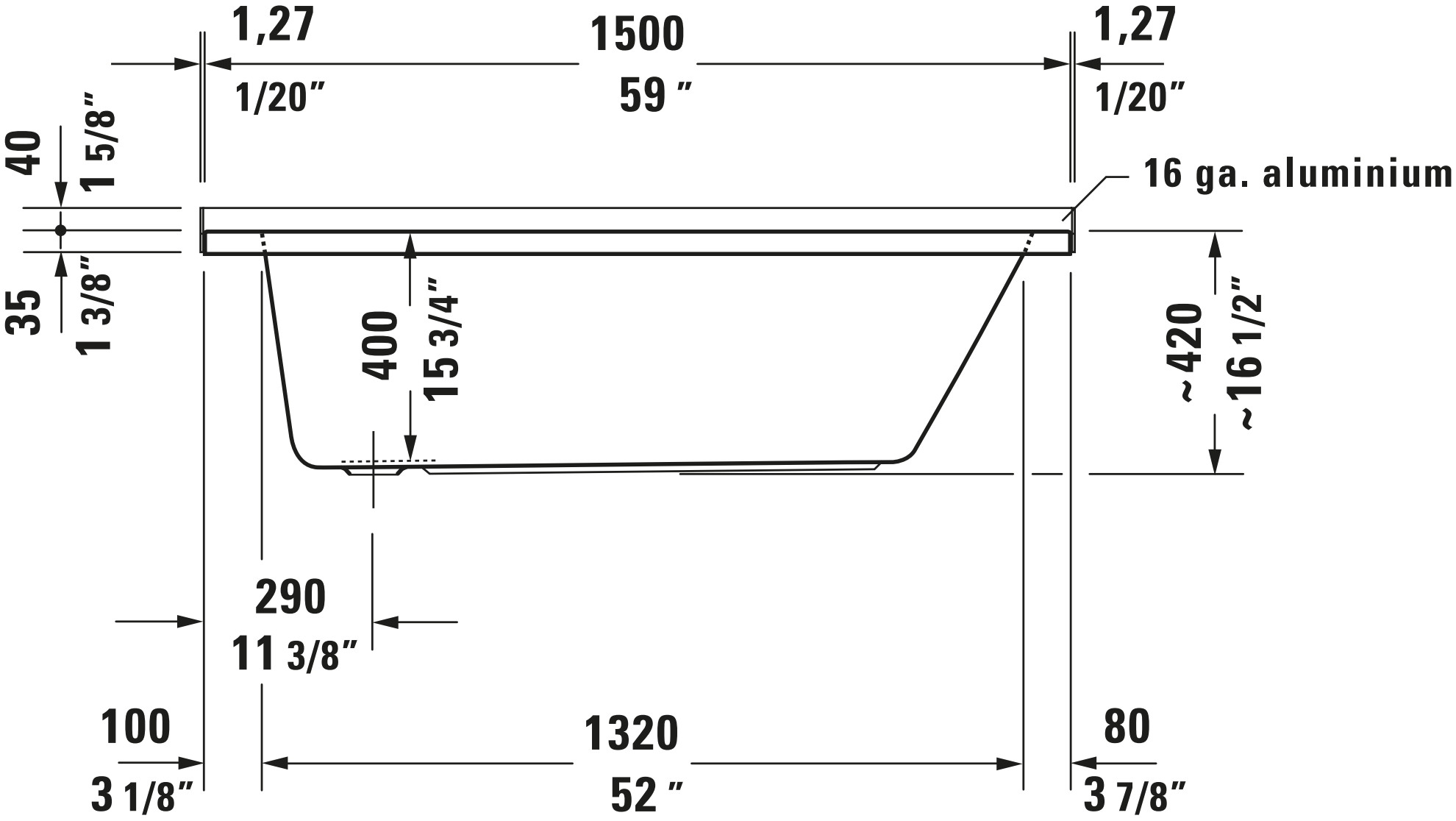
1,27
1/20"
1500
59 "
1,27
1/20"
40
1 5/8"
16 ga. aluminium
35
1 3/8"
400
15 3/4"
~420
~16 1/2"
290
11 3/8"
100
3 1/8"
1320
52 "
80
3 7/8"