Technical data sheet

MS4141 mounting rail, slot width 22 mm, FT, side perforation

Item number: 1122483



Heavy-duty C profile rail for individual installation of support constructions, e.g. for cable trays or as a panel for switchgear cabinets. Can also be used for cable routing, in conjunction with clamp clips with a U foot.

E30 E90

St Steel

FT Hot-dip galvanised

Master data

Item number	1122483
Type	MS4141PP3000FT
Description 1	Profile rail
Description 2	side perforation, slot 22 mm
Manufacturer	OBO
Dimension	3000x41x41
Material	Steel
Surface	Hot-dip galvanised
Surface standard	DIN EN ISO 1461
Smallest sales unit	3
Unit of quantity	Metre
Weight	233.34 kg
Weight unit	kg/100 m
CO2 Footprint (GWP) Cradle-to-Gate	5,2739 kg CO2e / 1 Meter

Technical data sheet

MS4141 mounting rail, slot width 22 mm, FT, side perforation

Item number: 1122483

Dimensions

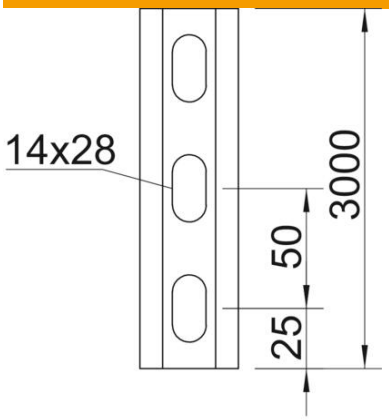

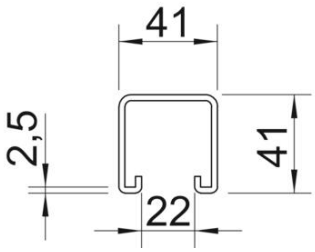

Length	3,000 mm
Width	41 mm
Height	41 mm
Dimension L	3,000 mm

Technical data

Breakable	no
Type of perforation	3 sides perforated
Version for	Single profile
Drill hole spacing, centre	50 mm
Maintain electrical functions	yes
Hole size	11x25
Material thickness	2.5 mm
With perforation	yes
With toothing	yes
Profile shape	C profile
ROHS-conformant	yes
Slot width	22 mm
Static value A	2.42 cm²
Static value Iy	6 cm⁴
Static value Iz	6.97 cm⁴
Static value Wy	2.49 cm³
Static value Wz	2.88 cm³