# Data Sheet | Item Number: 2216-1204

2-conductor through terminal block; with push-button; 16 mm²; with test port; suitable for Ex i applications; side and center marking; for DIN-rail 35 x 15 and 35 x 7.5; Push-in CAGE CLAMP®; 16,00 mm²; blue

https://www.wago.com/2216-1204

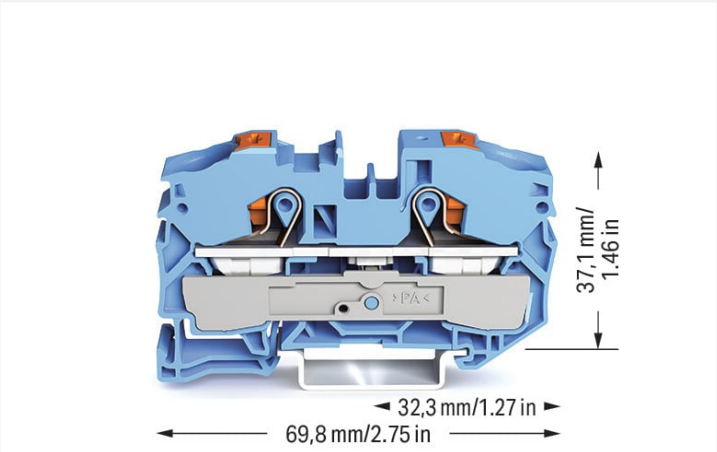


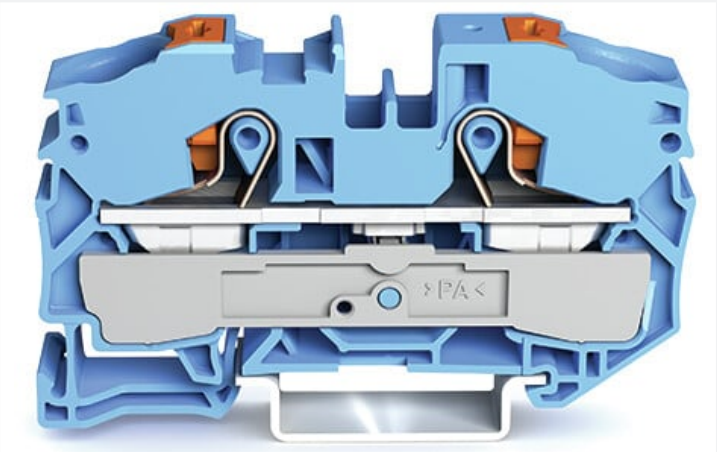

Color: blue

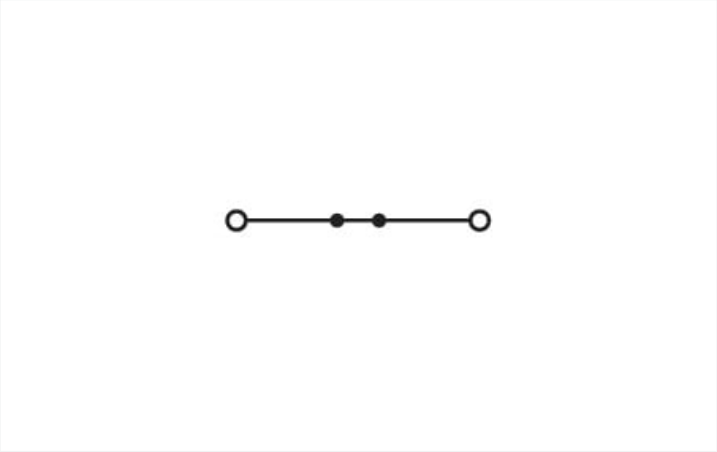

Similar to illustration

## Electrical data

| Ratings per | IEC/EN 60947-7-1 | | |
|---|---|---|---|
| Overvoltage category | III | III | II |
| Pollution degree | 3 | 2 | 2 |
| Nominal voltage | 800 V | - | - |
| Rated surge voltage | 8 kV | - | - |
| Rated current | 76 A | - | - |
| Current at conductor cross-section (max.) mm² | 90 A | - | - |

| Approvals per | UL 1059 | | |
|---|---|---|---|
| Use group | B | C | D |
| Rated voltage | 600 V | 600 V | - |
| Rated current | 85 A | 85 A | - |

| Approvals per | CSA 22.2 No 158 | | |
|---|---|---|---|
| Use group | B | C | D |
| Rated voltage | 600 V | 600 V | - |
| Rated current | 85 A | 85 A | - |

| Ex information | |
|---|---|
| Reference hazardous areas | See "Downloads – Documentation – Additional Information: Technical Section; Technical Explications" |
| Ratings per | ATEX: PTB 18 ATEX 1009 U / IECEx: PTB 18.0016U (Ex eb IIC Gb) |
| Rated voltage EN (Ex e II) | 550 V |
| Rated current (Ex e II) | 76 A |
| Rated current (Ex e II) with jumper | 65 A |


Continued on next page

## Power Loss

| | |
|---|---|
| Power loss, per pole (potential) | 2.4259 W |
| Rated current $I_N$ for specified power loss | 76 A |
| Resistance value for specified, current-dependent power loss | 0.00042 Ω |

## Connection data

| | |
|---|---|
| Connection points | 2 |
| Total number of potentials | 1 |
| Number of levels | 1 |
| Number of jumper slots | 2 |

### Connection 1

| | |
|---|---|
| Connection technology | Push-in CAGE CLAMP® |
| Actuation type | Push-button |
| Connectable conductor materials | Copper |
| Nominal cross-section | 16 mm² |
| Solid conductor | 0.5 … 16 mm² / 20 … 6 AWG |
| Solid conductor; push-in termination | 2.5 … 16 mm² / 14 … 6 AWG |
| Fine-stranded conductor | 0.5 … 25 mm² / 20 … 4 AWG |
| Fine-stranded conductor; with insulated ferrule | 0.5 … 16 mm² / 20 … 6 AWG |
| Fine-stranded conductor; with ferrule; push-in termination | 6 … 16 mm² / 10 … 6 AWG |
| Note (conductor cross-section) | Depending on the conductor characteristic, a conductor with a smaller cross-section can also be inserted via push-in termination. |
| Strip length | 18 … 20 mm / 0.71 … 0.79 inches |
| Wiring direction | Front-entry wiring |

## Physical data

| | |
|---|---|
| Width | 12 mm / 0.472 inches |
| Height | 69.8 mm / 2.748 inches |
| Depth from upper-edge of DIN-rail | 37.1 mm / 1.461 inches |

## Mechanical data

| | |
|---|---|
| Mounting type | DIN-35 rail |
| Marking level | Center/side marking |

## Material data

| | |
|---|---|
| Note (material data) | <a href="https://www.wago.com/us/material-specifications">Information on material specifications can be found here</a> |
| Color | blue |
| Material group | I |
| Insulation material | Polyamide (PA66) |
| Flammability class per UL94 | V0 |
| Fire load | 0.492 MJ |
| Actuator color | orange |
| Weight | 23.7 g |

 Continued on next page

## Environmental requirements

| | |
|---|---|
| Processing temperature | -35 … +85 °C |
| Continuous operating temperature | -60 … +105 °C |

## Commercial data

| | |
|---|---|
| eCl@ss 10.0 | 27-14-11-20 |
| eCl@ss 9.0 | 27-14-11-20 |
| ETIM 8.0 | EC000897 |
| ETIM 7.0 | EC000897 |
| PU (SPU) | 20 pcs |
| Packaging type | Box |
| Country of origin | DE |
| GTIN | 4055143732734 |
| Customs tariff number | 85369010000 |

## Environmental Product Compliance

| | |
|---|---|
| RoHS Compliance Status | Compliant,No Exemption |

## Approvals / Certificates

### General approvals

| Approval | Standard | Certificate Name |
|---|---|---|
| CCA<br>DEKRA Certification B.V. | EN 60947 | NTR NL-7947 |
| CSA<br>DEKRA Certification B.V. | C22.2 | 70175032 |
| cURus<br>Underwriters Laboratories Inc. | C22.2 No. 158 | E 45172 |
| KEMA/KEUR<br>DEKRA Certification B.V. | EN 60947 | 71-124545 |

### Declarations of conformity and manufacturer's declarations

| Approval | Standard | Certificate Name |
|---|---|---|
| ATEX-Attestation of Conformity<br>WAGO GmbH & Co. KG | - | - |
| EU-Declaration of Conformity<br>WAGO GmbH & Co. KG | - | - |
| UK-Declaration of Conformity<br>WAGO GmbH & Co. KG | - | - |

### Approvals for marine applications

| Approval | Standard | Certificate Name |
|---|---|---|
| ABS<br>American Bureau of Shipping | - | 19-HG1866350-PDA |
| BV<br>Bureau Veritas S.A. | IEC 60947 | 58186/A0 BV |
| DNV GL<br>Det Norske Veritas, Germanischer Lloyd | - | TAE00003JT |
| LR<br>Lloyds Register | - | 19/20050 |

### Approvals for hazardous areas

| Approval | Standard | Certificate Name |
|---|---|---|
| AEx<br>Underwriters Laboratories Inc. | UL 60079 | E185892 (AEx eb IIC resp. Ex eb IIC) |
| ATEX<br>Physikalisch Technische Bundesanstalt | EN 60079-0 | PTB 18 ATEX 1009 U (II 2 G Ex eb IIC Gb bzw. I M 2 Ex eb I Mb) |
| CCC<br>CNEX | GB/T 3836.3 | 2020312313000175 (Ex eb IIC Gb, Ex eb I Mb) |
| EAC<br>Brjansker Zertifizierungsstelle | TP TC 012/2011 | RU C-DE.AM02.B.00127/19 (Ex e IIC Gb U) |
| IECEx<br>Physikalisch Technische Bundesanstalt | IEC 60079 | IECEx PTB 18.0016U (Ex eb IIC Gb and Ex eb I Mb) |
| INMETRO<br>TÜV Rheinland do Brasil Ltda. | IEC 60079 | TÜV 19.0822 U |

 Continued on next page

## Downloads

### Environmental Product Compliance

**Compliance Search**

Environmental Product Compliance 2216-1204

### Documentation

**Additional Information**

| | | |
|---|---|---|
| Technical Section | pdf<br>2240.62 KB | |

**Bid Text**

| | | | |
|---|---|---|---|
| 2216-1204 | 15.04.2019 | xml<br>4.04 KB | |
| 2216-1204 | 15.04.2019 | docx<br>15.07 KB | |

### CAD/CAE-Data

**CAD data**

2D/3D Models 2216-1204

**CAE data**

EPLAN Data Portal 2216-1204

ZUKEN Portal 2216-1204

## 1 Compatible Products

### 1.1 Required Accessories

#### 1.1.1 End plate

##### 1.1.1.1 End plate

Item No.: 2016-1291
End and intermediate plate; 1 mm thick; gray

Item No.: 2016-1292
End and intermediate plate; 1 mm thick; orange

Item No.: 209-191
Separator for Ex e/Ex i applications; 3 mm thick; 120 mm wide; orange

### 1.2 Optional Accessories

#### 1.2.1 Cover

##### 1.2.1.1 Cover

Item No.: 2016-100
Finger guard; touchproof cover protects unused conductor entries; yellow

 Continued on next page

## 1.2.2 DIN-rail

### 1.2.2.1 Mounting accessories

Item No.: 210-196
Aluminum carrier rail; 35 x 8.2 mm; 1.6 mm thick; 2 m long; unslotted; similar to EN 60715; silver-colored

Item No.: 210-198
Copper carrier rail; 35 x 15 mm; 2.3 mm thick; 2 m long; unslotted; according to EN 60715; copper-colored

Item No.: 210-197
Steel carrier rail; 35 x 15 mm; 1.5 mm thick; 2 m long; slotted; similar to EN 60715; silver-colored

Item No.: 210-114
Steel carrier rail; 35 x 15 mm; 1.5 mm thick; 2 m long; unslotted; similar to EN 60715; silver-colored

Item No.: 210-118
Steel carrier rail; 35 x 15 mm; 2.3 mm thick; 2 m long; unslotted; according to EN 60715; silver-colored

Item No.: 210-115
Steel carrier rail; 35 x 7.5 mm; 1 mm thick; 2 m long; slotted; according to EN 60715; "Hole width 18 mm; silver-colored

Item No.: 210-112
Steel carrier rail; 35 x 7.5 mm; 1 mm thick; 2 m long; slotted; according to EN 60715; "Hole width 25 mm; silver-colored

Item No.: 210-113
Steel carrier rail; 35 x 7.5 mm; 1 mm thick; 2 m long; unslotted; according to EN 60715; silver-colored

## 1.2.3 Ferrule

### 1.2.3.1 Ferrule

Item No.: 216-284
Ferrule; Sleeve for 1.5 mm² / AWG 16; insulated; electro-tin plated; electrolytic copper; gastight crimped; acc. to DIN 46228, Part 4/09.90; black

Item No.: 216-289
Ferrule; Sleeve for 10 mm² / AWG 8; insulated; electro-tin plated; electrolytic copper; gastight crimped; acc. to DIN 46228, Part 4/09.90; red

Item No.: 216-210
Ferrule; Sleeve for 16 mm² / AWG 6; insulated; electro-tin plated; electrolytic copper; gastight crimped; acc. to DIN 46228, Part 4/09.90; blue

Item No.: 216-286
Ferrule; Sleeve for 2.5 mm² / AWG 14; insulated; electro-tin plated; electrolytic copper; gastight crimped; acc. to DIN 46228, Part 4/09.90; blue

Item No.: 216-287
Ferrule; Sleeve for 4 mm² / AWG 12; insulated; electro-tin plated; electrolytic copper; gastight crimped; acc. to DIN 46228, Part 4/09.90; gray

Item No.: 216-288
Ferrule; Sleeve for 6 mm² / AWG 10; insulated; electro-tin plated; electrolytic copper; gastight crimped; acc. to DIN 46228, Part 4/09.90; yellow

## 1.2.4 Installation

### 1.2.4.1 Cover



Item No.: 709-156
Cover; Type 3; suitable for cover carrier, type 3; 1 m long; transparent

### 1.2.4.2 Cover carrier

Item No.: 709-169
Cover carrier; Type 3; incl. fixing/retaining screws and knurled nut; suitable for 279 to 282 and 880 Series rail-mounted terminal blocks; suitable for 264 Series miniature rail-mounted terminal blocks; suitable for 270 Series sensor and actuator terminal blocks; gray

 Continued on next page

## 1.2.5 Jumper

### 1.2.5.1 Jumper

Item No.: 2016-402
Jumper; 2-way; insulated; light gray

Item No.: 2016-403
Jumper; 3-way; insulated; light gray

Item No.: 2016-404
Jumper; 4-way; insulated; light gray

Item No.: 2016-405
Jumper; 5-way; insulated; light gray

Item No.: 2016-433
Jumper; from 1 to 3; insulated; light gray

Item No.: 2016-434
Jumper; from 1 to 4; insulated; light gray

Item No.: 2016-435
Jumper; from 1 to 5; insulated; light gray

Item No.: 2016-405/011-000
Star point jumper; 3-way; insulated; light gray

Item No.: 2016-499
Step-down jumper; from 2016/2010 to 2010/2006/2004/2002 series; from 2216/2210 to 2210/2206/2204/2202 series; insulated; light gray

Item No.: 285-430
Step-down jumper; from 285 (35mm²) to 2016/2010 series; insulated; gray

## 1.2.6 Marking

### 1.2.6.1 Group marker carrier

Item No.: 2009-191
Group marker carrier; gray

Item No.: 2009-192
Group marker carrier; gray

Item No.: 2009-193
Group marker carrier; gray

### 1.2.6.2 Marker

Item No.: 2009-145/000-006
Mini-WSB Inline; for Smart Printer; 1700 pieces on roll; stretchable 5 - 5.2 mm; plain; snap-on type; blue

Item No.: 2009-145/000-007
Mini-WSB Inline; for Smart Printer; 1700 pieces on roll; stretchable 5 - 5.2 mm; plain; snap-on type; gray

Item No.: 2009-145/000-023
Mini-WSB Inline; for Smart Printer; 1700 pieces on roll; stretchable 5 - 5.2 mm; plain; snap-on type; green

Item No.: 2009-145/000-012
Mini-WSB Inline; for Smart Printer; 1700 pieces on roll; stretchable 5 - 5.2 mm; plain; snap-on type; orange

Item No.: 2009-145/000-005
Mini-WSB Inline; for Smart Printer; 1700 pieces on roll; stretchable 5 - 5.2 mm; plain; snap-on type; red

Item No.: 2009-145/000-024
Mini-WSB Inline; for Smart Printer; 1700 pieces on roll; stretchable 5 - 5.2 mm; plain; snap-on type; violet

Item No.: 2009-145
Mini-WSB Inline; for Smart Printer; 1700 pieces on roll; stretchable 5 - 5.2 mm; plain; snap-on type; white

Item No.: 2009-145/000-002
Mini-WSB Inline; for Smart Printer; 1700 pieces on roll; stretchable 5 - 5.2 mm; plain; snap-on type; yellow

Item No.: 248-501/000-006
Mini-WSB marking card; as card; not stretchable; plain; snap-on type; blue

Item No.: 248-501/000-007
Mini-WSB marking card; as card; not stretchable; plain; snap-on type; gray

Item No.: 248-501/000-023
Mini-WSB marking card; as card; not stretchable; plain; snap-on type; green

Item No.: 248-501/000-017
Mini-WSB marking card; as card; not stretchable; plain; snap-on type; light green

Item No.: 248-501/000-012
Mini-WSB marking card; as card; not stretchable; plain; snap-on type; orange

Item No.: 248-501/000-005
Mini-WSB marking card; as card; not stretchable; plain; snap-on type; red

Item No.: 248-501/000-024
Mini-WSB marking card; as card; not stretchable; plain; snap-on type; violet

Item No.: 248-501
Mini-WSB marking card; as card; not stretchable; plain; snap-on type; white

Item No.: 248-501/000-002
Mini-WSB marking card; as card; not stretchable; plain; snap-on type; yellow

Item No.: 793-5501/000-006
WMB marking card; as card; for terminal block width 5 - 17.5 mm; stretchable 5 - 5.2 mm; plain; snap-on type; blue

Item No.: 793-5501/000-007
WMB marking card; as card; for terminal block width 5 - 17.5 mm; stretchable 5 - 5.2 mm; plain; snap-on type; gray

Item No.: 793-5501/000-023
WMB marking card; as card; for terminal block width 5 - 17.5 mm; stretchable 5 - 5.2 mm; plain; snap-on type; green

Item No.: 793-5501/000-017
WMB marking card; as card; for terminal block width 5 - 17.5 mm; stretchable 5 - 5.2 mm; plain; snap-on type; light green

Item No.: 793-5501/000-012
WMB marking card; as card; for terminal block width 5 - 17.5 mm; stretchable 5 - 5.2 mm; plain; snap-on type; orange

Item No.: 793-5501/000-005
WMB marking card; as card; for terminal block width 5 - 17.5 mm; stretchable 5 - 5.2 mm; plain; snap-on type; red

Item No.: 793-5501/000-024
WMB marking card; as card; for terminal block width 5 - 17.5 mm; stretchable 5 - 5.2 mm; plain; snap-on type; violet

 Continued on next page

## 1.2.6.2 Marker



Item No.: 793-5501
WMB marking card; as card; for terminal block width 5 - 17.5 mm; stretchable 5 - 5.2 mm; plain; snap-on type; white

Item No.: 793-5501/000-002
WMB marking card; as card; for terminal block width 5 - 17.5 mm; stretchable 5 - 5.2 mm; plain; snap-on type; yellow

Item No.: 793-501/000-006
WMB marking card; as card; not stretchable; plain; snap-on type; blue

Item No.: 793-501/000-007
WMB marking card; as card; not stretchable; plain; snap-on type; gray

Item No.: 793-501/000-023
WMB marking card; as card; not stretchable; plain; snap-on type; green

Item No.: 793-501/000-017
WMB marking card; as card; not stretchable; plain; snap-on type; light green

Item No.: 793-501/000-012
WMB marking card; as card; not stretchable; plain; snap-on type; orange

Item No.: 793-501/000-005
WMB marking card; as card; not stretchable; plain; snap-on type; red

Item No.: 793-501/000-024
WMB marking card; as card; not stretchable; plain; snap-on type; violet

Item No.: 793-501
WMB marking card; as card; not stretchable; plain; snap-on type; white

Item No.: 793-501/000-002
WMB marking card; as card; not stretchable; plain; snap-on type; yellow

Item No.: 2009-115/000-006
WMB-Inline; for Smart Printer; 1500 pieces on roll; stretchable 5 - 5.2 mm; plain; snap-on type; blue

Item No.: 2009-115/000-007
WMB-Inline; for Smart Printer; 1500 pieces on roll; stretchable 5 - 5.2 mm; plain; snap-on type; gray

Item No.: 2009-115/000-023
WMB-Inline; for Smart Printer; 1500 pieces on roll; stretchable 5 - 5.2 mm; plain; snap-on type; green

Item No.: 2009-115/000-017
WMB-Inline; for Smart Printer; 1500 pieces on roll; stretchable 5 - 5.2 mm; plain; snap-on type; light green

Item No.: 2009-115/000-012
WMB-Inline; for Smart Printer; 1500 pieces on roll; stretchable 5 - 5.2 mm; plain; snap-on type; orange

Item No.: 2009-115/000-024
WMB-Inline; for Smart Printer; 1500 pieces on roll; stretchable 5 - 5.2 mm; plain; snap-on type; violet

Item No.: 2009-115
WMB-Inline; for Smart Printer; 1500 pieces on roll; stretchable 5 - 5.2 mm; plain; snap-on type; white

Item No.: 2009-115/000-002
WMB-Inline; for Smart Printer; 1500 pieces on roll; stretchable 5 - 5.2 mm; plain; snap-on type; yellow

## 1.2.6.3 Marker carrier

Item No.: 2009-198
Adaptor; gray

## 1.2.6.4 Marking strip

Item No.: 2009-110
Marking strips; for Smart Printer; on reel; not stretchable; plain; snap-on type; white

## 1.2.7 Screwless end stop

### 1.2.7.1 Mounting accessories

Item No.: 249-117
Screwless end stop; 10 mm wide; for DIN-rail 35 x 15 and 35 x 7.5; gray

Item No.: 249-116
Screwless end stop; 6 mm wide; for DIN-rail 35 x 15 and 35 x 7.5; gray

 Continued on next page

## 1.2.8 Test and measurement

### 1.2.8.1 Testing accessories

Item No.: 2016-511
Modular TOPJOB®S connector; modular; for jumper contact slot; 1-pole; 4,00 mm²; gray

Item No.: 2016-549
Spacer module; modular; e.g., for bridging commoned terminal blocks; gray



Item No.: 2009-174
Test plug adapter; for 4 mm Ø test plugs; for testing TOPJOB®S rail-mounted terminal blocks; gray

Item No.: 2009-182
Testing tap; for max. 2.5 mm²; tool-free connection for individual test wires 0.08 - 2.5 mm; gray

## 1.2.9 Tool

### 1.2.9.1 Operating tool

Item No.: 210-721
Operating tool; Blade: 5.5 x 0.8 mm; with a partially insulated shaft; multicoloured

## Installation Notes

### Conductor termination

**All conductor types at a glance**

Push-in termination of solid and ferruled conductors

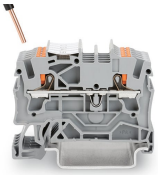

Push-in termination of solid and ferruled conductors

Insert fine-stranded conductors via operating tool.

Removing all conductors via operating tool.

### Commoning

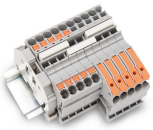

Insert a push-in type jumper bar and push down until it hits the backstop.

Commoning with step-down jumpers.

 Continued on next page

## Testing

Testing with a 2 mm Ø test plug (max. 42 V).

## Marking

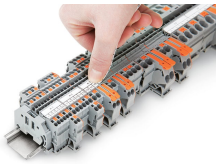

Snapping a marking strip into a marker slot.

Snapping a marking strip into the marker slot.