Technical data sheet

US 5 support A4

Item number: 6341209



Suspended support (U profile) with welded head plate.
For fastening to horizontal concrete ceilings and steel girders. For bracket widths of 400 mm or more, or if the bracket is mounted at the end of a suspended support, we recommend the use of the spacer, type DSK 45.

CE UK CA US5

A4	Stainless steel
2B	Bright, treated

Master data

Item number	6341209
Type	US 5 K 20 A4
Description 1	Support
Description 2	with welded head plate
Manufacturer	OBO
Dimension	50x50x200
Colour	stainless steel
Material	Stainless steel 1.4571
Surface Surface standard	Bright, treated
Smallest sales unit	1
Unit of quantity	Piece
Weight	81 kg
Weight unit	kg/100 pc.
CO2 Footprint (GWP) Cradle-to-Gate	4,5946 kg CO2e / 1 Piece

Technical data sheet

US 5 support A4

Item number: 6341209

Dimensions

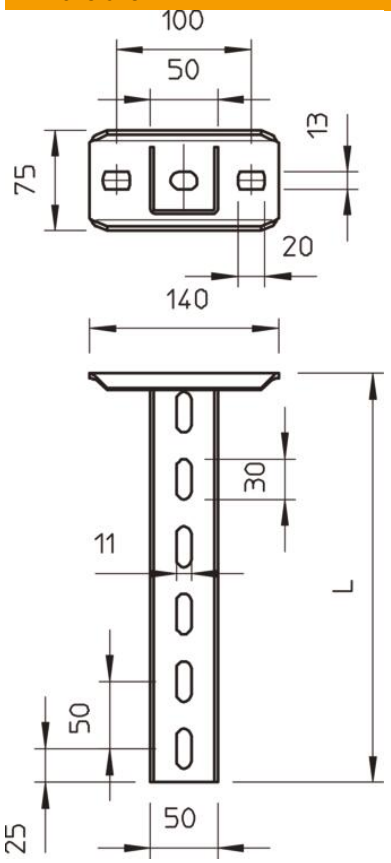

Length	200 mm
Width	50 mm
Height	50 mm

Technical data

Version for	U profile
Bracket length 200	5.75 kN
Bracket length 400	3.1 kN
Bracket length 600	2.2 kN
Maintain electrical functions	no
Material thickness	2.5 mm
Maximum tensile load	10 kN
ROHS-conformant	yes

Technical data sheet

US 5 support A4

Item number: 6341209

Loads

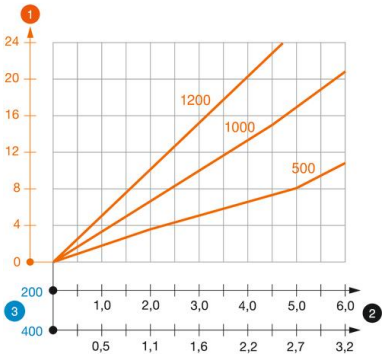

Load diagram, U support, type US 5 K VA

1. Bending of the end of the suspended support at permitted bracket load
2. Permitted bracket load in kN without man load
3. Bracket length in mm

—— Load curves with support lengths in mm

Characteristic anchor load values for US 5 K support

	Single-sided load			
	Max. load [kN]			
	Bracket width [mm]			
Anchor type	110%	210	310	410
BZ3 10x90/0-30	4.31	3.18	2.51	2.06
BZ3 12x110/0-35	5.82	4.29	3.39	2.77

Max. total load F = cable weight + cable tray + bracket + suspended support. The tabular values for double-sided loads take the available axis spacing ai = 10 cm into account. The stated values are based on uncracked concrete of compressive strength C20/25. Please comply with the installation conditions of ETA(anchors).