Technical data sheet

Flat angle, for device installation trunking Rapid 45-2 type GK-53100
Item number: 6113080



Flat angle for changing the direction of the Rapid 45-2 device installation trunking.

PVC Polyvinylchloride

Master data

Item number	6113080
Type	GK-FS53100RW
Description 1	Flat angle
Description 2	rigid form
Manufacturer	OBO
Dimension	200x200x100
Colour	Pure white; RAL 9010
Material	Polyvinylchloride
Smallest sales unit	1
Unit of quantity	Piece
Weight	34.6 kg
Weight unit	kg/100 pc.
CO2 Footprint (GWP) Cradle-to-Gate	1,8865 kg CO2e / 1 Piece

Technical data sheet

Flat angle, for device installation trunking Rapid 45-2 type GK-53100

Item number: 6113080

Dimensions

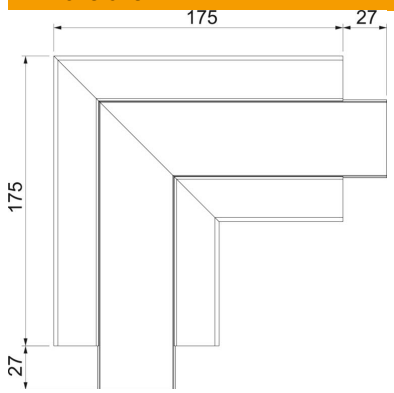

Length	175 mm
Width	100 mm
Height	53 mm

Technical data

Number of covers	1
Version for	Base and cover
for duct width	100 mm
for trunking height	53 mm
Halogen-free	no
Cable retaining clip	no
Duct connector	no
Cover mounting type	Internal
Mounting perforation in base	yes
Cover width	45 mm
Cover width 2	0 mm
Cover width 3	0 mm
Change of direction	Vertical, rising/falling
ROHS-conformant	yes
Protection rating	IP40
Protective film	yes
Protection rating IK code	IK08
Symmetrical	yes
Permitted temperature range, max.	60 °C
Permitted temperature range, min.	-15 °C
Angle range, max.	90 mm
Angle range, min.	90 mm