Deutsches Institut für Bautechnik DIBt

Member of EOTA
www.eota.eu

Approval body for construction products and types of construction

Bautechnisches Prüfamt

An institution established by the Federal and Laender Governments

Designated according to Article 29 of Regulation (EU) No 305/2011 and member of EOTA (European Organisation for Technical Assessment)

European Technical Assessment

ETA-20/0729 of 31 October 2023

English translation prepared by DIBt - Original version in German language

General Part

Technical Assessment Body issuing the European Technical Assessment:	Deutsches Institut für Bautechnik
Trade name of the construction product	fischer injection system FIS V Plus for masonry
Product family to which the construction product belongs	Metal Injection anchors for use in masonry
Manufacturer	fischerwerke GmbH & Co. KG Otto-Hahn-Straße 15 79211 Denzlingen DEUTSCHLAND
Manufacturing plant	fischerwerke
This European Technical Assessment contains	155 pages including 3 annexes which form an integral part of this assessment
This European Technical Assessment is issued in accordance with Regulation (EU) No 305/2011, on the basis of	330076-01-0604, Edition 10/2022
This version replaces	ETA-20/0729 issued on 26 November 2020

Deutsches Institut für Bautechnik
Kolonnenstraße 30 B | 10829 Berlin | GERMANY | Phone: +49 30 78730-0 | Fax: +49 30 78730-320 | Email: dibt@dibt.de | www.dibt.de

The European Technical Assessment is issued by the Technical Assessment Body in its official language. Translations of this European Technical Assessment in other languages shall fully correspond to the original issued document and shall be identified as such.

Communication of this European Technical Assessment, including transmission by electronic means, shall be in full. However, partial reproduction may only be made with the written consent of the issuing Technical Assessment Body. Any partial reproduction shall be identified as such.

This European Technical Assessment may be withdrawn by the issuing Technical Assessment Body, in particular pursuant to information by the Commission in accordance with Article 25(3) of Regulation (EU) No 305/2011.

Specific Part

1 Technical description of the product

The fischer injection system FIS V Plus for masonry is a bonded anchor (injection type) consisting of a mortar cartridge with injection mortar fischer FIS V Plus, FIS VS Plus Low Speed and FIS VW Plus High Speed, a perforated sieve sleeve and an anchor rod with hexagon nut and washer or an internal threaded rod in the range of M6 to M16. The steel elements are made of zinc coated steel, stainless steel or high corrosion resistant steel.

The anchor rod is placed into a drilled hole filled with injection mortar and is anchored via the bond between steel element, injection mortar and masonry and mechanical interlock.

The product description is given in Annex A.

2 Specification of the intended use in accordance with the applicable European Assessment Document

The performances given in Section 3 are only valid if the fastener is used in compliance with the specifications and conditions given in Annex B.

The verifications and assessment methods on which this European Technical Assessment is based lead to the assumption of a working life of the fastener of at least 50 years. The indications given on the working life cannot be interpreted as a guarantee given by the producer, but are to be regarded only as a means for choosing the right products in relation to the expected economically reasonable working life of the works.

3 Performance of the product and references to the methods used for its assessment

3.1 Mechanical resistance and stability (BWR 1)

Essential characteristic	Performance
Characteristic resistance for static and quasi-static loading	See Annexes B 4 to B 7, B 21, B 22, C 1 to C 123
Characteristic resistance and displacements for seismic loading	No performance assessed

3.2 Safety in case of fire (BWR 2)

Essential characteristic	Performance
Reaction to fire	Class A1
Resistance to fire under tension and shear loading with and without lever arm. Minimum edge distances and spacing	See Annex C 124

3.3 Hygiene, health and the environment (BWR 3)

Essential characteristic	Performance
Content, emission and/or release of dangerous substances	No performance assessed

4 Assessment and verification of constancy of performance (AVCP) system applied, with reference to its legal base

In accordance with the European Assessment Document EAD 330076-01-0604 the applicable European legal act is: [97/177/EC].

The system to be applied is: 1

5 Technical details necessary for the implementation of the AVCP system, as provided for in the applicable European Assessment Document

Technical details necessary for the implementation of the AVCP system are laid down in the control plan deposited at Deutsches Institut für Bautechnik.

Issued in Berlin on 31 October 2023 by Deutsches Institut für Bautechnik

Dipl.-Ing. Beatrix Wittstock
Head of Section

beglaubigt:
Baderschneider

Installation conditions part 1

Anchor rods with perforated sleeve FIS H K; Installation in perforated and solid brick masonry

Pre-positioned anchorage:

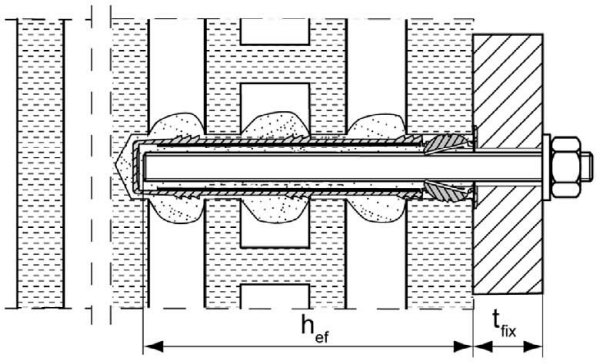

Installation with render bridge

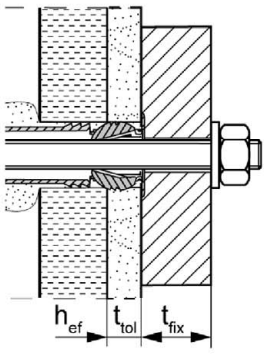

Size of the perforated sleeve: FIS H 12x50 K, FIS H 12x85 K, FIS H 16x85 K, FIS H 16x130 K, FIS H 20x85 K, FIS H 20x130 K, FIS H 20x200 K

Push through anchorage:

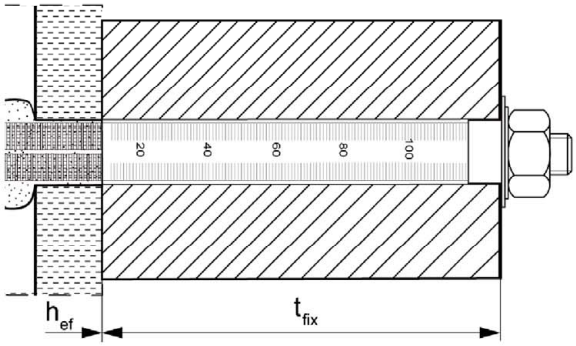

Installation with render bridge

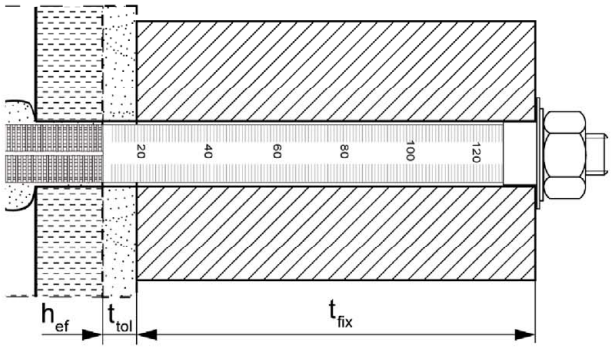

Size of the perforated sleeve: FIS H 18x130/200 K, FIS H 22x130/200 K

Internal threaded anchor FIS E with perforated sleeve FIS H K;
Installation in perforated and solid brick masonry

Pre-positioned anchorage:

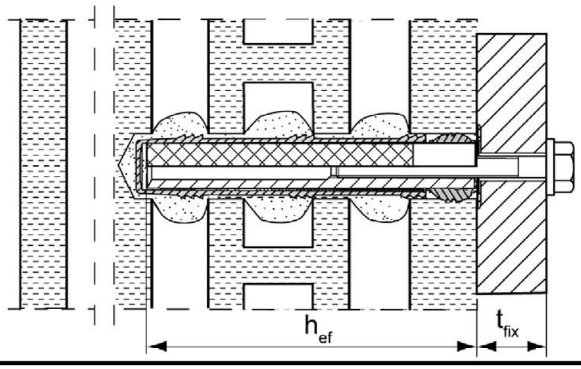

Figures not to scale

h_{ef} = effective anchorage depth

t_{fix} = thickness of fixture

t_{tol} = thickness of unbearing layer (e.g. plaster)

fischer injection system FIS V Plus for masonry

Product description
Installation conditions part 1,
Anchor rods and internal threaded anchor with perforated sleeve

Annex A 1

Installation conditions part 2

Anchor rods without perforated sleeve FIS H K;
installation in solid brick masonry and autoclaved aerated concrete

Pre-positioned anchorage:

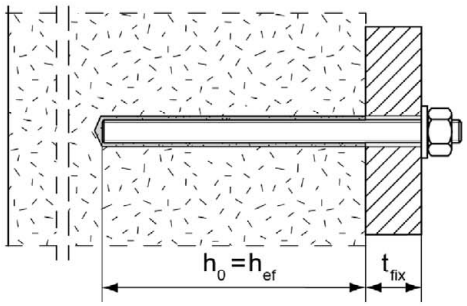

Push through anchorage: Annular gap filled with mortar

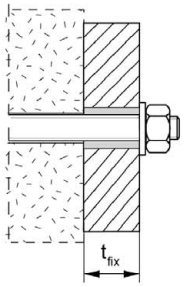

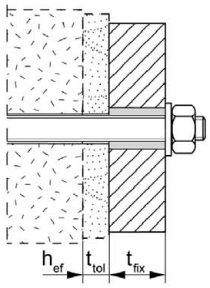

Installation with render bridge

Internal threaded anchors FIS E without perforated sleeve FIS H K;
installation in solid brick masonry and autoclaved aerated concrete

Pre-positioned anchorage:

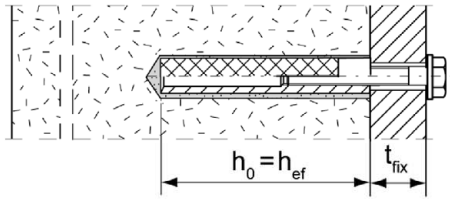

Installation with render bridge

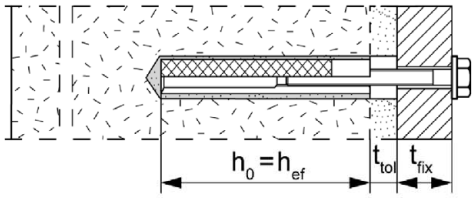

Anchor rods and internal threaded anchors FIS E without perforated sleeve FIS H K; installation with centring sleeve in autoclaved aerated concrete with conical drill hole
(installation with special conic drill bit PBB)

Pre-positioned anchorage:
anchor rods M8, M10, M12

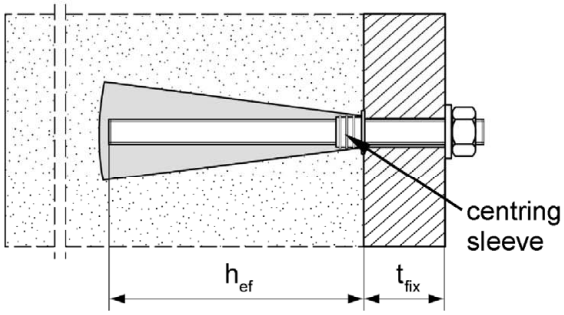

Pre-positioned anchorage:
Internal threaded anchor FIS E 11x85 M6 / M8

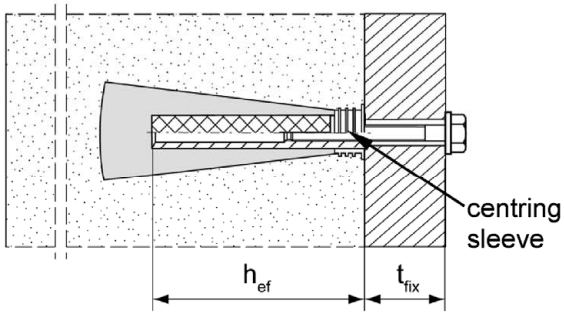

Figures not to scale

h_0 = depth of drill hole
h_{ef} = effective anchorage depth
t_{tol} = thickness of unbearing layer (e.g. plaster)
t_{fix} = thickness of fixture

fischer injection system FIS V Plus for masonry

Product description
Installation conditions part 2, Anchor rods and internal threaded anchor without perforated sleeve / with centring sleeve

Annex A 2

Overview system components part 1

Mortar cartridge (shuttle cartridge) with sealing cap

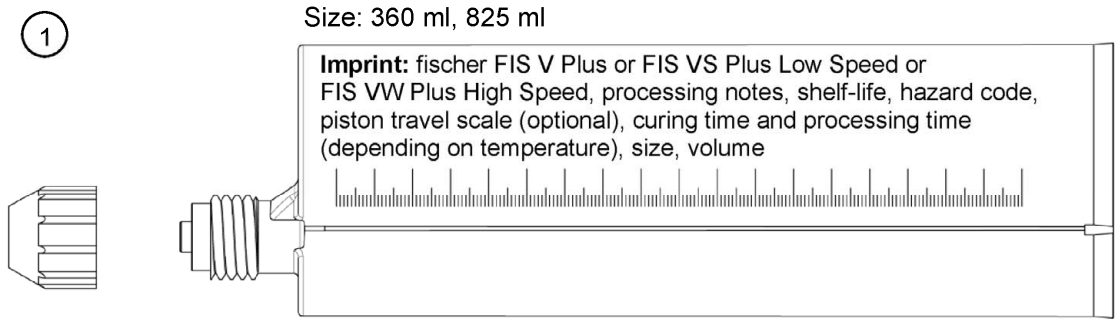

Mortar cartridge (coaxial cartridge) with sealing cap

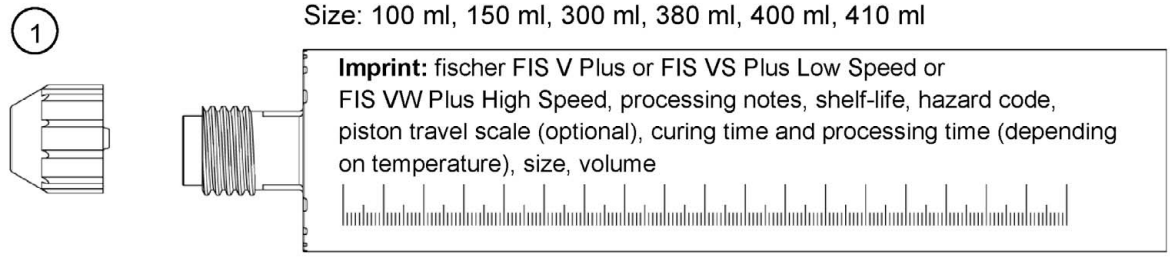

Static mixer FIS MR Plus for injection cartridges up to 410 ml

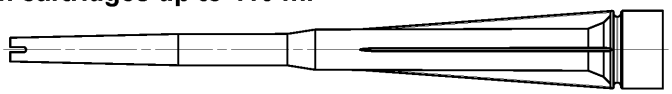

Static mixer FIS JMR for injection cartridges 825 ml

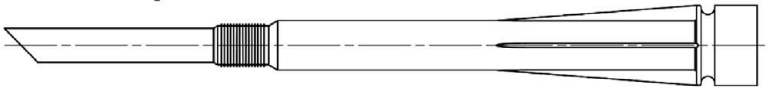

Extension tube Ø 9 for static mixer FIS MR Plus;
Extension tube Ø 9 or Ø 15 for static mixer FIS JMR

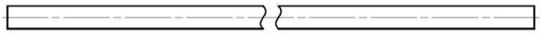

Cleaning brush BS

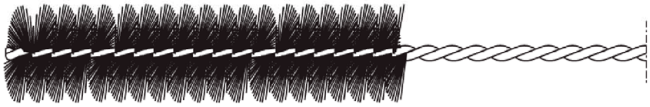

Blow-out pump AB-G

compressed-air cleaning tool

Figures not to scale

fischer injection system FIS V Plus for masonry

Product description
Overview system components part 1: cartridge / static mixer / cleaning tools

Annex A 3

Overview system components part 2

fischer anchor rod

(2) 

Size: M6, M8, M10, M12, M16

Internal threaded anchor FIS E

(5) 

Size: 11x85 M6 / M8
15x85 M10 / M12

Perforated sleeve FIS H K

(7) 

Size: FIS H 12x50 K
FIS H 12x85 K
FIS H 16x85 K
FIS H 20x85 K

(7) 

Size: FIS H 16x130 K
FIS H 20x130 K
FIS H 20x200 K

Perforated sleeve FIS H K (push through anchorage)

(7) 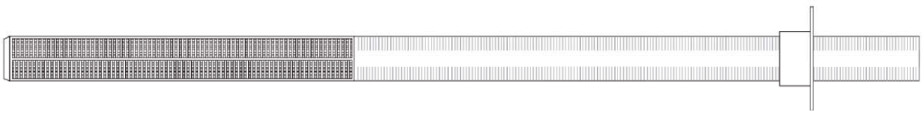

Size:
FIS H 18x130/200 K
FIS H 22x130/200 K

Washer

(3) 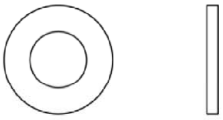

Hexagon nut

(4) 

Injection adapter

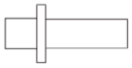

centring sleeve PBZ

(7) 

Special conic drill bit PBB

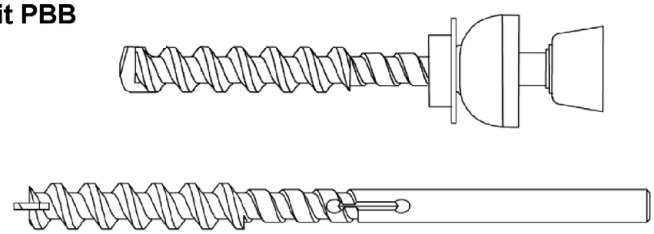

Figures not to scale

fischer injection system FIS V Plus for masonry

Product description
Overview system components part 2: steel parts / perforated sleeve / conical drill bit / Injection adapter / centring sleeve

Annex A 4

Table A5.1: Materials

Part	Designation	Material		
1	Mortar cartridge	Mortar, hardener; filler		
		Steel	Stainless steel R	High corrosion resistant steel HCR
		zinc plated	acc. to EN 10088-1:2014 Corrosion resistance class CRC III acc. to EN 1993-1-4:2006+A1:2015	acc. to EN 10088-1:2014 Corrosion resistance class CRC V acc. to EN 1993-1-4:2006+A1:2015
2	Anchor rod	Property class 4.6; 4.8; 5.8 or 8.8; EN ISO 898-1: 2013 zinc plated ≥ 5µm, ISO 4042:2022 or hot-dip galvanised EN ISO 10684:2004+AC:2009 f_{uk} ≤ 1000 N/mm² A_5 > 8% fracture elongation	Property class 50, 70 or 80 EN ISO 3506-1:2020 1.4401; 1.4404; 1.4578; 1.4571; 1.4439; 1.4362; 1.4062; 1.4662; 1.4462; EN 10088-1:2014 f_{uk} ≤ 1000 N/mm² A_5 > 8% fracture elongation	Property class 50 or 80 EN ISO 3506-1:2020 or property class 70 with f_{yk}= 560 N/mm² 1.4565; 1.4529 EN 10088-1:2014 f_{uk} ≤ 1000 N/mm² A_5 > 8% fracture elongation
3	Washer ISO 7089:2000	zinc plated ≥ 5µm, ISO 4042:2018 or hot-dip galvanised EN ISO 10684:2004+AC:2009	1.4401; 1.4404; 1.4578; 1.4571; 1.4439; 1.4362; EN 10088-1:2014	1.4565;1.4529 EN 10088-1:2014
4	Hexagon nut	Property class 5 or 8; EN ISO 898-2:2012 zinc plated ≥ 5µm, ISO 4042:2018 or hot-dip galvanised EN ISO 10684:2004+AC:2009	Property class 50, 70 or 80 EN ISO 3506-2:2020 1.4401; 1.4404; 1.4578; 1.4571; 1.4439; 1.4362; EN 10088-1:2014	Property class 50, 70 or 80 EN ISO 3506-2:2020 1.4565; 1.4529 EN 10088-1:2014
5	Internal threaded anchor FIS E	Property class 5.8; EN 10277-1:2008-06 zinc plated ≥ 5µm, ISO 4042:2018	Property class 70 EN ISO 3506-1:2020 1.4401; 1.4404; 1.4578; 1.4571; 1.4439; 1.4362; EN 10088-1:2014	Property class 70 EN ISO 3506-1:2020 1.4565; 1.4529 EN 10088-1:2014
6	Commercial standard screw or threaded rod for internal threaded anchor FIS E	Property class 4.6, 5.8 or 8.8; EN ISO 898-1:2013 zinc plated ≥ 5µm, ISO 4042:2018	Property class 70 EN ISO 3506-1:2020 1.4401; 1.4404; 1.4578; 1.4571; 1.4439; 1.4362; EN 10088-1:2014	Property class 70 EN ISO 3506-1:2020 1.4565; 1.4529 EN 10088-1:2014
7	Perforated sleeve and centring sleeve	PP / PE		

fischer injection system FIS V Plus for masonry

Product description
Materials

Annex A 5

Specifications of intended use part 1

Table B1.1: Overview use and performance categories

Anchorages subject to		**fischer injection system FIS V Plus for masonry**	
Hole drilling with hammer drill mode		all bricks; without C 28 to C 48, C 75 to C 78	
Hole drilling with rotary drill mode		all bricks	
Hole drilling with special conic drill bit		Only C 118 to C 122	
Static and quasi static load, in masonry		all bricks	
Resistance to fire under tension and shear loading		C 124 (Applies only to the conditions of dry masonry)	
Installation	Pre-positioned anchorage	Anchor rod or internal threaded anchor (in solid brick masonry and autoclaved aerated concrete)	Perforated sleeve with anchor rod or internal threaded anchor (in perforated and solid brick masonry) Size: FIS H 12x50 K FIS H 12x85 K FIS H 16x85 K FIS H 16x130 K FIS H 20x85 K FIS H 20x130 K FIS H 20x200 K
	Push through anchorage	Anchor rod; use only in cylindrical drill hole (in solid brick masonry and autoclaved aerated concrete)	Perforated sleeve with anchor rod (in perforated and solid brick masonry) Size: FIS H 18x130/200 K FIS H 22x130/200 K
Installation and use conditions	conditions d/d (dry/dry)	all bricks	
	conditions w/d (wet/dry)		
	conditions w/w (wet/wet)		
Installation direction		D3 (downward and horizontal installation)	
Installation temperature		$T_{i,min}$ = -10 °C to $T_{i,max}$ = +40 °C	
In-service temperature	Temperature range Tb	-40 °C to +80 °C	(max. short term temperature +80 °C max. long term temperature +50 °C)
	Temperature range Tc	-40 °C to +120 °C	(max. short term temperature +120 °C; max. long term temperature +72 °C)

fischer injection system FIS V Plus for masonry	**Annex B 1**
Intended Use Specifications part 1	

Specifications of intended use part 2

Anchorages subject to:

- Static and quasi-static loads
- Resistance to fire under tension and shear loading

Base materials:

- Solid brick masonry (base material group b) and autoclaved aerated concrete (base material group d), acc. to Annex B 13 / B 14.
- Hollow brick masonry (base material group c), according to Annex B 13 / B 14
- For minimum thickness of masonry member is h_{ef}+30mm
- Mortar strength class of the masonry M2,5 at minimum according to EN 998-2:2016
- For other bricks in solid masonry, hollow or perforated masonry and autoclaved aerated concrete, the characteristic resistance of the anchor may be determined by job site tests (not for bricks under fire exposure) according to EOTA Technical Report TR 053:2022-07, Annex B under consideration of the β-factor according to Annex C 123, Table C123.1.

  Note (only applies to solid bricks and autoclaved aerated concrete):
  The characteristic resistance is also valid for larger brick sizes, higher compressive strength and higher raw density of the masonry unit.

Temperature Range:

- **Tb:** From - 40°C to +80°C (max. short term temperature +80°C and max. long term temperature +50°C)
- **Tc:** From -40°C to +120°C (max. short term temperature +120°C and max. long term temperature +72°C)

Use conditions (Environmental conditions):

- Structures subject to dry internal conditions (zinc plated steel, stainless steel or high corrosion resistant steel)
- For all other conditions according to EN 1993-1-4:2015 corresponding to corrosion resistance classes to Annex A 5, Table A5.1.

Specifications of intended use part 2 continued

Design:

- The anchorages have to be designed in accordance with EOTA Technical Report TR 054:2022-07 (included the dimensioning for fire exposure), Design method A under the responsibility of an engineer experienced in anchorages and masonry work.

  Applies to all bricks, if no other values are specified:

  $N_{Rk} = N_{Rk,b} = N_{Rk,p} = N_{Rk,b,c} = N_{Rk,p,c}$

  $V_{Rk} = V_{Rk,b} = V_{Rk,c,II} = V_{Rk,c,\perp}$

  For the calculation of pulling out a brick under tension loading $\mathbf{N_{Rk,pb}}$ or pushing out a brick under shear loading $\mathbf{V_{Rk,pb}}$ see EOTA Technical Report TR 054:2022-07.

  $\mathbf{N_{Rk,s}}$, $\mathbf{V_{Rk,s}}$ and $\mathbf{M^0_{Rk,s}}$ see annexes C 1-C 3

  Factors for job site tests and displacements see annex C 123.

- Verifiable calculation notes and drawings have to be prepared taking account the relevant masonry in the region of the anchorage, the loads to be transmitted and their transmission to the supports of the structure. The position of the anchor is indicated on the design drawings.

Installation:

- Conditions d/d: - Installation and use in dry structures.
- Conditions w/w:- Installation and use in dry and wet structures.
- Conditions w/d: - Installation in wet structures and use in dry structures.
- Hole drilling see Annex C (drilling method).
- In case of aborted hole: The hole shall be filled with mortar.
- Bridging of unbearing layer (e.g., plaster) masonry with solid bricks and cylindrical drill hole. At perforated brick masonry see Annex B 6, Table B6.1.
- Anchor installation carried out by appropriately qualified personnel and under the supervision of the person responsible for technical matters of the site.
- Fastening screws or anchor rods (including nut and washer) must comply with the appropriate material and property class of the fischer internal threaded anchor FIS E.
- Minimum curing time see Annex B 8, Table B8.2.
- Commercial standard threaded rods, washers and hexagon nuts may also be used if the following requirements are fulfilled:

  Material dimensions and mechanical properties of the metal parts according to the specifications are given in Annex A 5, Table A5.1

  Conformation of material and mechanical properties of the metal parts by inspection certificate 3.1 according to EN 10204:2004, the documents shall be stored.

  Marking of the anchor rod with the envisage embedment depth. This may be done by the manufacturer of the rod or by a person on job site.

Table B4.1: Installation parameters for anchor rods in solid bricks and autoclaved aerated concrete without perforated sleeves

Anchor rod	Thread	M6	M8	M10	M12	M16
Nominal drill hole diameter	d_0 [mm]	8	10	12	14	18
Effective anchorage depth h_{ef} [1)] in AAC cylindrical drill hole	$h_{0,min}=h_{ef,min}$ [mm]	100				
	$h_{0,max}=h_{ef,max}$ [mm]	200				
Effective anchorage depth h_{ef} [1)] in AAC conical drill hole	h_o [mm]	-	h_{ef} + 5			-
	$h_{ef,1}$ [mm]		75			
	$h_{ef,2}$ [mm]		95			
Effective anchorage depth h_{ef} [1)] in solid brick (depth of drill hole $h_0 = h_{ef}$)	$h_{ef,min}$ [mm]	50				
	$h_{ef,max}$ [mm]	h-30, ≤200				
Diameter of clearance hole in the fixture	pre-position $d_f \leq$ [mm]	7	9	12	14	18
	push through $d_f \leq$ [mm]	9	11	14	16	20
Diameter of cleaning brush	$d_b \geq$ [mm]	see Table B8.1				
Maximum installation torque	T_{inst} [Nm]	see parameters of brick				

[1)] $h_{ef,min} \leq h_{ef} \leq h_{ef,max}$ is possible.

fischer anchor rods M6, M8, M10, M12, M16

Marking (on random place) fischer anchor rod:

Steel zinc plated PC[1)] 8.8	• or +	Steel hot-dip galvanised PC[1)] 8.8	•
High corrosion resistant steel HCR PC[1)] 50	•	High corrosion resistant steel HCR PC[1)] 70	–
High corrosion resistant steel HCR PC[1)] 80	(	Stainless steel R property class 50	~
Stainless steel R property class 80	✳		

Alternatively: Colour coding according to DIN 976-1: 2016; property class 4.6 marking according to EN ISO 898-1:2013

[1)] PC = property class

Installation conditions:

Anchor rod in cylindrical drill hole

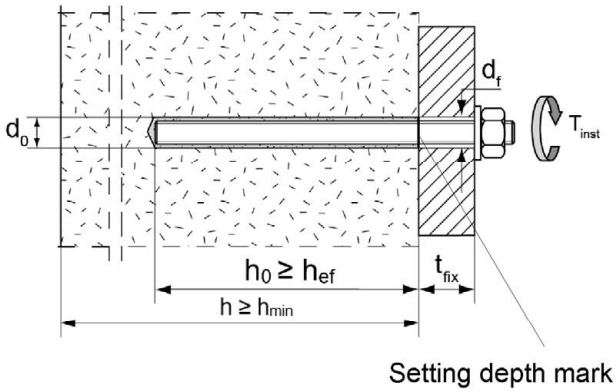

Anchor rod in conical drill hole

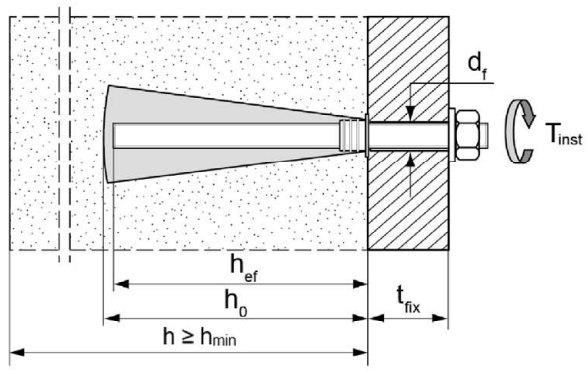

Figures not to scale

fischer injection system FIS V Plus for masonry

Intended Use
Installation parameters for anchor rods without perforated sleeve

Annex B 4

Table B5.1: Installation parameters for internal threaded anchors FIS E in solid bricks and autoclaved aerated concrete without perforated sleeves

Internal threaded anchor FIS E		**11x85 M6**	**11x85 M8**	**15x85 M10**	**15x85 M12**
Diameter of anchor	d_H [mm]	11		15	
Nominal drill hole diameter	d_0 [mm]	14		18	
Length of anchor	L_H [mm]	85			
Effective anchorage depth	$h_0 = h_{ef}$ [mm]	85			
Effective anchorage depth h_{ef} in AAC (conical drill hole)	h_0 [mm]	100		-	
	h_{ef} [mm]	85			
Diameter of cleaning brush	$d_b \geq$ [mm]	see Table B8.1			
Maximum installation torque	T_{inst} [Nm]	see parameters of brick			
Diameter of clearance hole in the fixture	d_f [mm]	7	9	12	14
Screw-in depth	$l_{E,min}$ [mm]	6	8	10	12
	$l_{E,max}$ [mm]	60			

fischer Internal threaded anchor FIS E

FIS E 11x85 M6, FIS E 11x85 M8

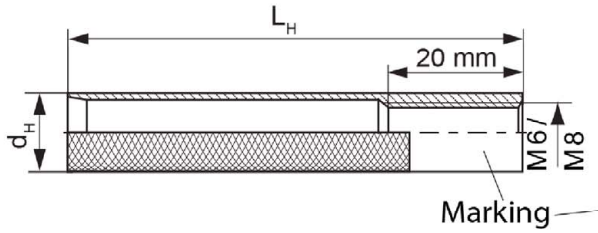

FIS E 15x85 M10, FIS E 15x85 M12

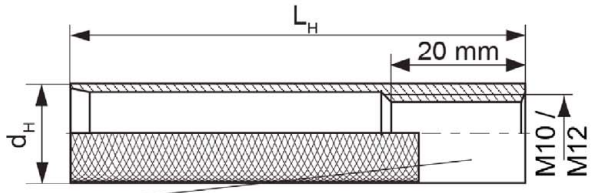

Marking:

Size, e.g. **M8**, Stainless steel: R, e.g. **M8 R**, High corrosion resistant steel: HCR, e.g. **M8 HCR**

Installation conditions:

Internal threaded anchor in cylindrical drill hole

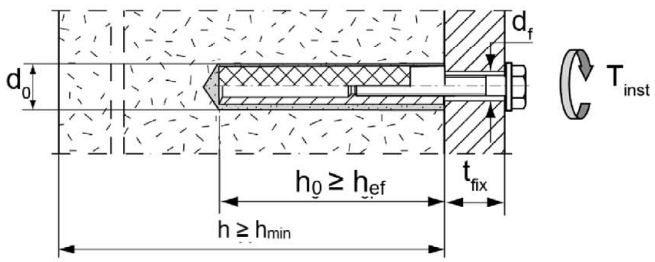

Internal threaded anchor in conical drill hole

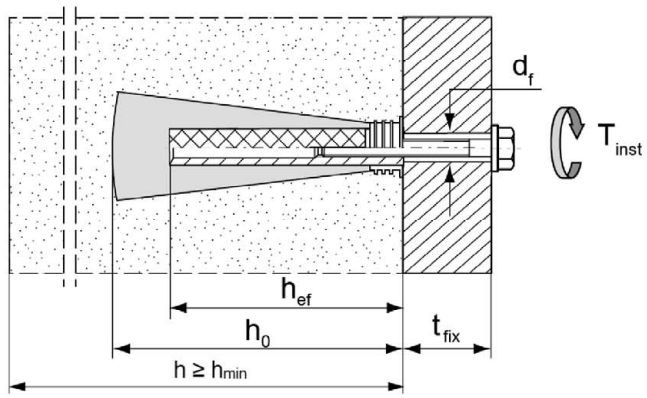

Figures not to scale

fischer injection system FIS V Plus for masonry

Intended Use
Installation parameters for internal threaded rods FIS E without perforated sleeve

Annex B 5

Table B6.1: Installation parameters for anchor rods and internal threaded anchors FIS E with perforated sleeves (pre-positioned anchorage)

perforated sleeve FIS H K		**12x50**	**12x85**[2]	**16x85**	**16x130**[2]	**20x85**	**20x130**[2]	**20x200**[2]
Nominal drill hole diameter $d_0 = D_{sleeve,nom}$	d_0 [mm]	12		16		20		
Depth of drill hole	h_0 [mm]	55	90	90	135	90	135	205
Effective anchorage depth	$h_{ef,min}$ [mm]	50	65	85	110	85	110	180
	$h_{ef,max}$ [mm]	50	85	85	130	85	130	200
Size of threaded rod	[-]	M6 and M8		M8 and M10		M12 and M16		
Size of internal threaded anchor FIS E		-	-	11x85	-	15x85	-	-
Diameter of cleaning brush[1]	$d_b \geq$ [mm]	see Table B8.1						
Maximum installation torque	T_{inst} [Nm]	see parameters of brick						

[1] Only for solid areas in hollow bricks and solid bricks.

[2] Bridging of unbearing layer (e.g. plaster) is possible. When reducing the effective anchorage depth $h_{ef,\,min}$, the values of the next shorter perforated sleeve of the same diameter must be used. The smaller value of charastereristic resistance must be taken.

Perforated sleeve

FIS H 12x50 K; FIS H 12x85 K; FIS H 16x85 K; FIS H 16x130 K;
FIS H 20x85 K; FIS H 20x130 K; FIS H 20x200 K

Marking:
Size $D_{sleeve,\,nom}$ x L_{sleeve}
(e.g.: 16x85)

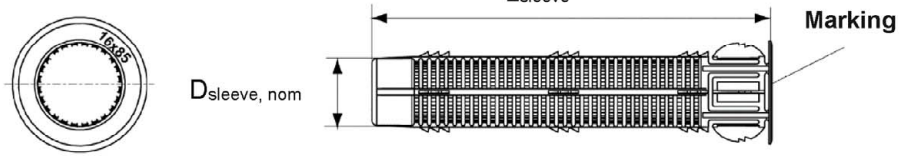

fischer Internal threaded anchor FIS E

FIS E 11x85 M6, FIS E 11x85 M8

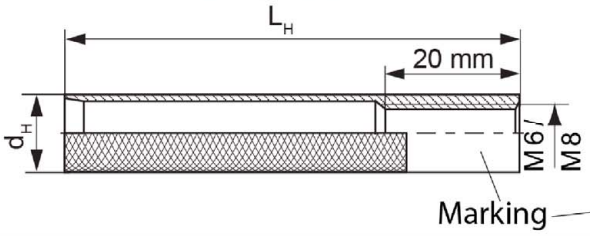

FIS E 15x85 M10, FIS E 15x85 M12

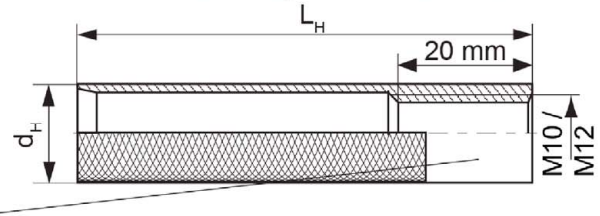

Installation conditions:

Anchor rod with perforated sleeve

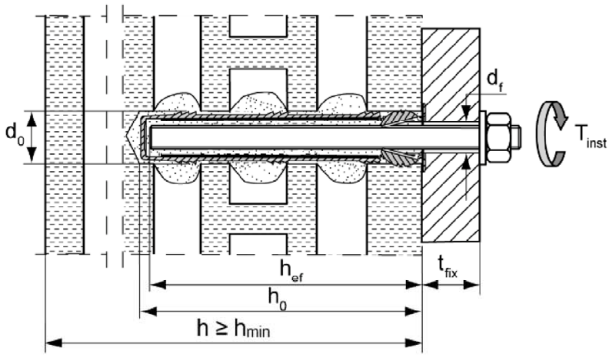

Internal threaded anchor with perforated sleeve

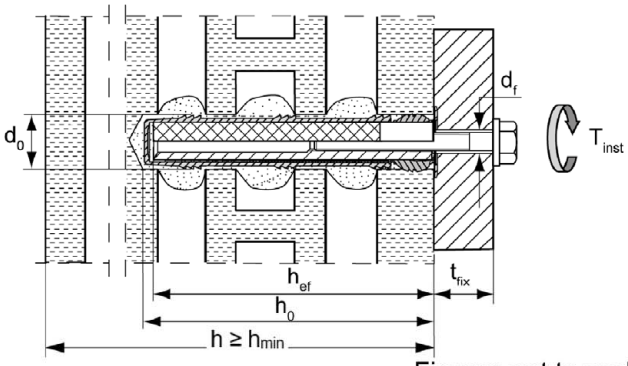

Figures not to scale

fischer injection system FIS V Plus for masonry

Intended Use
Installation parameters for anchor rods and internal threaded anchors FIS E with perforated sleeve (pre-positioned anchorage)

Annex B 6

Table B7.1: Installation parameters for anchor rods with perforated sleeves (push through anchorage)

Perforated sleeve FIS H K		**18x130/200**		**22x130/200**
Nominal sleeve diameter	$D_{sleeve,nom}$ [mm]	16		20
Nominal drill hole diameter	d_0 [mm]	18		22
Depth of drill hole	h_0 [mm]	135		
Effective anchorage depth	h_{ef} [mm]	≥130		
Diameter of cleaning brush [1)]	d_b ≥ [mm]	see Table B8.1		
Size of threaded rod	[-]	M10	M12	M16
Maximum installation torque	T_{inst} [Nm]	see parameters of brick		
Thickness of fixture	$t_{fix,max}$ [mm]	200		

[1)] Only for solid areas in hollow bricks and solid bricks.

Perforated sleeve
FIS H 18x130/200 K; FIS H 22x130/200 K

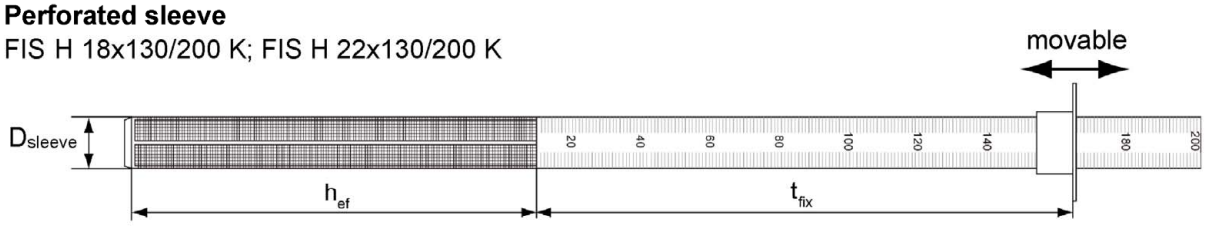

Installation conditions:

Anchor rod with perforated sleeve

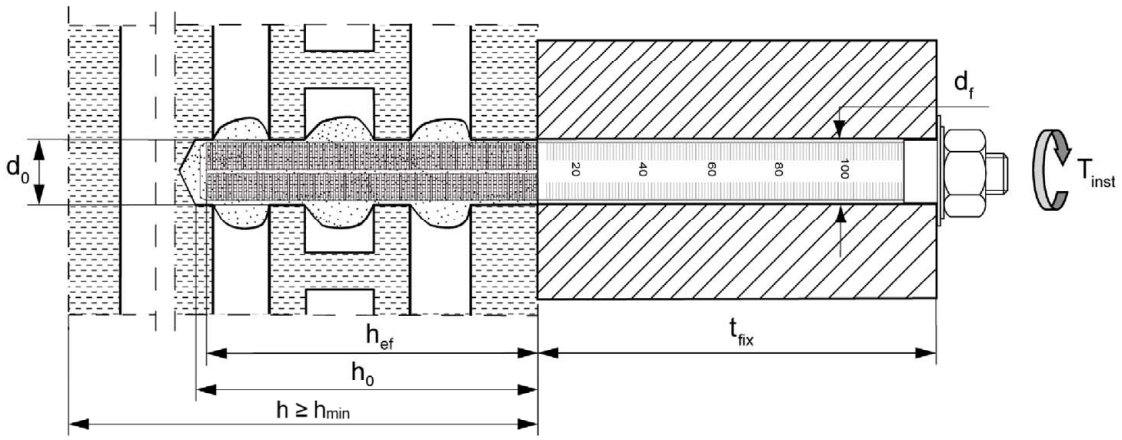

Figures not to scale

fischer injection system FIS V Plus for masonry

Intended Use
Installation parameters for anchor rods with perforated sleeves (push through anchorage)

Annex B 7

Table B8.1: Parameters of the cleaning brush BS (steel brush with steel bristles)

The size of the cleaning brush refers to the drill hole diameter

Drill hole diameter	d_0 [mm]	8	10	12	14	16	18	20	22
Brush diameter	d_b [mm]	9	11	14	16	20	20	25	25

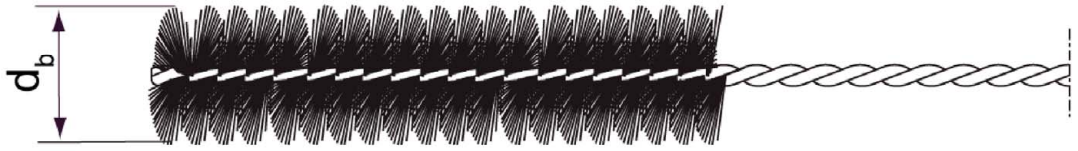

Only for solid bricks and autoclaved aerated concrete or solid areas of perforated bricks and hollow blocks

Table B8.2: Maximum processing times and minimum curing times
(During the curing time of the mortar the masonry temperature may not fall below the listed minimum temperature)

Temperature at anchoring base [°C]	Maximum processing time [2] t_{work}			Minimum curing time [1), 2)] t_{cure}		
	FIS VW Plus High Speed	FIS V Plus	FIS VS Plus Low Speed	FIS VW Plus High Speed	FIS V Plus[1)]	FIS VS Plus Low Speed
-10 to -5	>5 min	-	-	12 h	-	-
> -5 to 0	5 min	>13 min	-	3 h	24 h	-
> 0 to 5	5 min	13 min	>20 min	3 h	3 h	6 h
> 5 to 10	3 min	9 min	20 min	50 min	90 min	3 h
> 10 to 20	1 min	5 min	10 min	30 min	60 min	2 h
> 20 to 30	-	4 min	6 min	-	45 min	60 min
> 30 to 40	-	2 min	4 min	-	35 min	30 min

[1)] For wet bricks the curing time must be doubled.

[2)] Minimum cartridge temperature +5°C.

Figures not to scale

fischer injection system FIS V Plus for masonry

Intended Use
Cleaning brush (steel brush)
Maximum processing times and minimum curing times

Annex B 8

Installation instruction part 1

Installation in solid brick and autoclaved aerated concrete (without perforated sleeve)

1	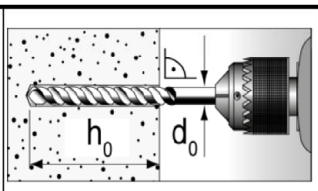	Drill the hole (drilling method see Annex C of the respective brick) depth of drill hole $\mathbf{h_0}$ and drill hole diameter $\mathbf{d_0}$ see **Table B4.1; B5.1**		
2	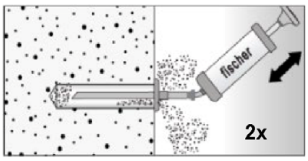	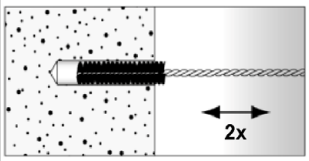	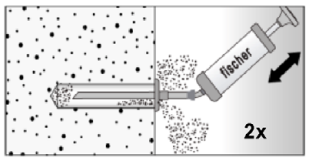	Blow out the drill hole twice. Brush twice and blow out twice again.
3	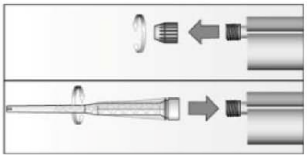	Remove the sealing cap. Screw on the static mixer. (the spiral in the static mixer must be clearly visible).		
4		Place the cartridge into a suitable dispenser	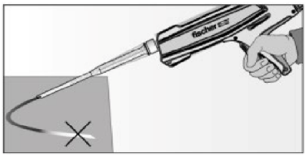	Press out approximately 10 cm of mortar until the resin is permanently grey in colour. Mortar which is not grey in colour will not cure and must be disposed of.
5	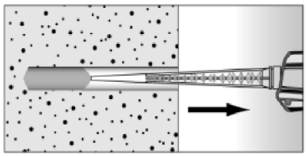	Fill approximetly 2/3 of the drill hole with mortar beginning from the bottom of the hole[1]. Avoid bubbles!	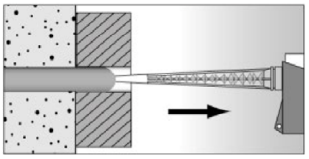	For push through anchorage fill the annular clearance with mortar.
6	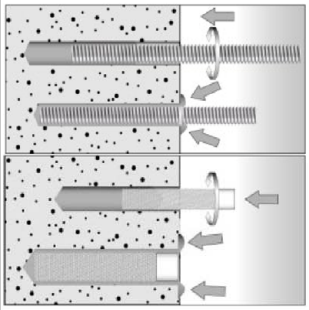	Only use clean and oil-free metal parts. Mark the anchor rod for setting depth. Insert the anchor rod or internal threaded anchor FIS E by hand using light turning motions. When reaching the setting depth marking, excess mortar must emerge from the mouth of the drill hole.		
7		Do not touch. Minimum curing time see **Table B8.2**	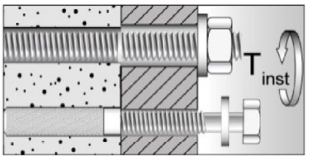	Mounting the fixture. max T_{inst} see parameter of brick in **Annex C**.

[1] Exact volume of mortar see manufacturer´s specification.

fischer injection system FIS V Plus for masonry	**Annex B 9**
Intended Use Installation instruction (without perforated sleeve) part 1	

Installation instruction part 2

Installation in perforated or solid brick with perforated sleeve (pre-positioned anchorage)

1	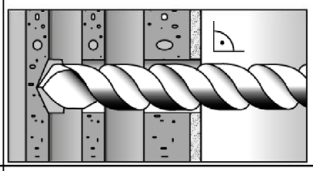	Drill the hole (drilling method see Annex C of the respective brick). depth of drill hole $\mathbf{h_0}$ and drill hole diameter $\mathbf{d_0}$ see **Table B6.1**	When install perforated sleeves in solid bricks or solid areas of hollow bricks, also clean the hole by blowing out and brushing.	
2	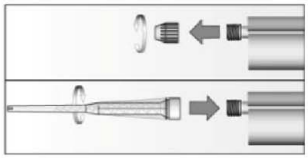	Remove the sealing cap. Screw on the static mixer. (the spiral in the static mixer must be clearly visible).		
3		Place the cartridge into a suitable dispenser.	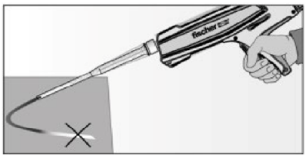	Press out approximately 10 cm of mortar until the resin is permanently grey in colour. Mortar which is not grey in colour will not cure and must be disposed of.
4	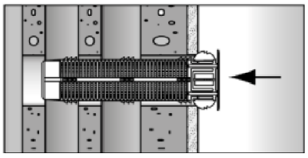	Insert the perforated sleeve flush with the surface of the masonry or plaster.	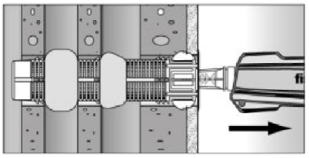	Fill the perforated sleeve completely with mortar beginning from the bottom of the hole[1].
5	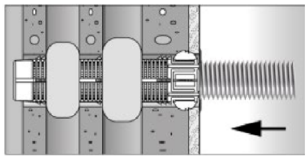	Only use clean and oil-free metal parts. Mark the ancher rod for setting depth. Insert the anchor rod or the internal threaded anchor FIS E by hand using light turning motions until reaching the setting depth marking (anchor rod) or flush with the surface (internal threaded anchor).		
6		Do not touch. Minimum curing time see Table **B8.2**	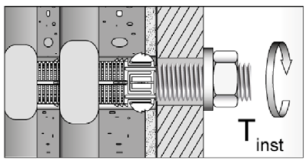	Mounting the fixture. max T_{inst} see parameter of brick in **Annex C**.

[1] Exact volume of mortar see manufacturer´s specification.

Installation instruction part 3

Installation in perforated or solid brick with perforated sleeve (push through anchorage)

1	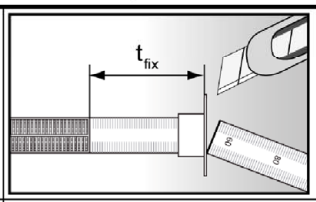	Push the movable stop up to the correct thickness of fixture and cut the overlap.	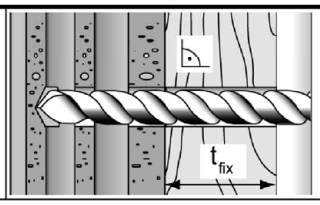	Drill the hole through the fixture. Depth of drill hole **(h_0 + t_{fix})** and drill hole diameter see **Table B7.1**.
2	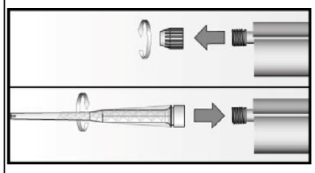	Remove the sealing cap. Screw on the static mixer. (the spiral in the static mixer must be clearly visible).		
3	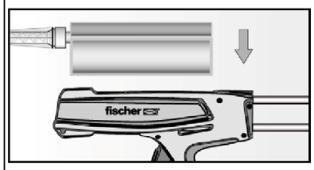	Place the cartridge into a suitable dispenser.	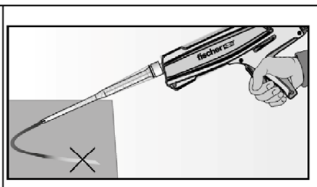	Press out approximately 10 cm of mortar until the resin is permanently grey in colour. Mortar which is not grey in colour will not cure and must be disposed of.
4	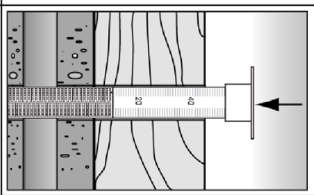	Insert the perforated sleeve flush with the surface of the fixture into the drill hole.	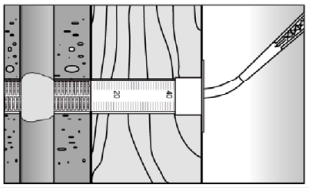	Fill the sleeve with mortar beginning from the bottom of the hole.[1] For deep drill holes use an extension tube.
5	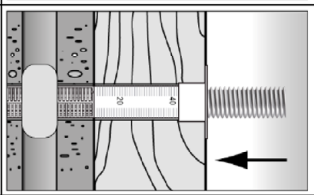	Only use clean and oil-free metal parts. Mark the anchor rod for setting depth. Insert the anchor rod or the internal threaded anchor FIS E by hand using light turning motions until reaching the setting depth marking (anchor rod) or flush with the surface (internal threaded anchor).		
6		Do not touch. Minimum curing time see **Table B8.2**.	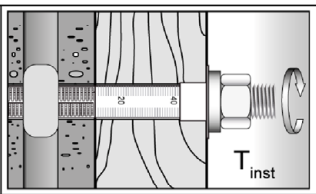	Mounting the fixture. max T_{inst} see parameter of brick in **Annex C**.

[1] Exact volume of mortar see manufacturer´s specification.

fischer injection system FIS V Plus for masonry	**Annex B 11**
Intended Use Installation instruction (with perforated sleeve) part 3	

Installation instruction part 4

Installation in autoclaved aerated concrete with special conic drill bit PBB (pre-positioned anchorage)

1	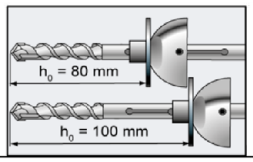	Position the movable drill bit arrester on the used drill hole depth (see **Table B4.1**). For this, unlock the clamp screw and slide the arrester. Now fix the clamp screw.		
2	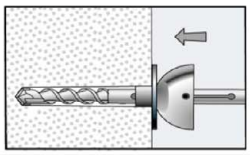	Drill the cylindrical hole with rotating drill until the arrester contact the material surface (drilling method see Annex C of the respective brick).		
3	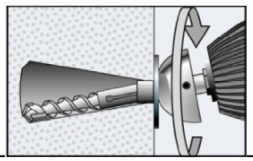	Deviate the working power drill circulate to generate an conic undercut in the material.		
4	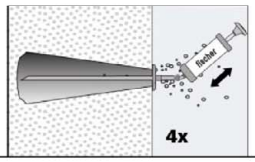	Blow out the drill hole four times.		
5	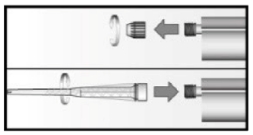	Remove the sealing cap. Screw on the static mixer. (the spiral in the static mixer must be clearly visible).		
6	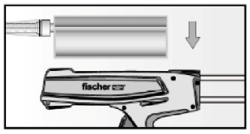	Place the cartridge into a suitable dispenser.	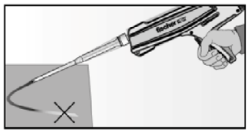	Press out approximately 10 cm of mortar until the resin is permanently grey in colour. Mortar which is not grey in colour will not cure and must be disposed of.
7	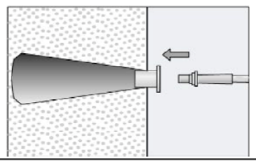	Put the center sleeve into the drill hole and adapt the injection adapter onto the static mixer.	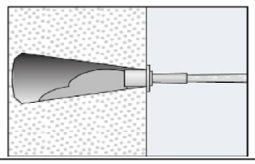	Fill the drill hole with injection mortar.
8	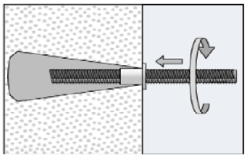	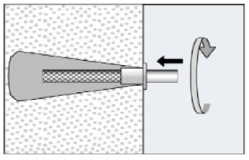	Only use clean and oil-free metal parts. Mark the anchor rod for setting depth. Insert the anchor rod or internal threaded anchor FIS E by hand using light turning motions. When reaching the setting depth marking, excess mortar must emerge from the mouth of the drill hole.	
9		Do not touch. Minimum curing time see **Table B8.2**.	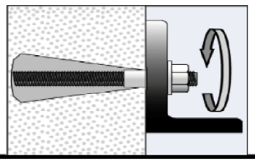	Mounting the fixture. max T_{inst} see parameter of brick **in Annex C**.

fischer injection system FIS V Plus for masonry

Intended Use
Installation instruction for autoclaved aerated concrete with special conic drill bit PBB (pre-positioned anchorage) part 4

Annex B 12

Table B13.1: Overview of assessed bricks part 1

Kind of masonry	Brick format [mm]	Mean compressive strength [N/mm²]	Main country of origin	Mean gross density ρ [kg/dm³]	Annex
Solid brick Mz					
Solid brick Mz	**NF** ≥240x115x71	12 / 20 / 28	Germany	≥1,8	C 4 – C 7
	2DF ≥240x115x113	10 / 16	Germany	≥1,8	C 8 / C 9
	≥ 245x118x54	10 / 20	Italy	≥1,8	C 10 / C 11
	≥ 230x108x55	10 / 20	Denmark	≥1,8	C 12 / C 13
Solid calcium silicate (sand- lime) brick KS / perforated calcium silicate (sand- lime) brick KSL					
Solid calcium silicate brick KS	**NF** ≥240x115x71	12 - 28	Germany	≥2,0	C 14 / C 15
	8DF ≥ 250x240x240	10 - 28	Germany	≥2,0	C 16 / C 17
	≥ 997x214x538	10 - 36	Netherlands	≥1,8	C 18 / C 19
	≥ 240x115x113	10 / 20	Germany	≥1,8	C 20 – C 23
Perforated calcium silicate brick KSL	**3DF** 240x175x113	8 - 20	Germany	≥1,4	C 24 – C 27
Vertical perforated brick HLz					
Vertical perforated brick HLz	370x240x237	4 - 12	Germany	≥1,0	C 28 / C 29
	500x175x237	4 - 12	Germany	≥1,0	C 28 / C 29
	2DF 240x115x113	6 - 28	Germany	≥1,4	C 30 / C 31
	248x365x248	4 - 8	Germany	≥0,6	C 32 – C 35
	248x365x249	8 - 12	Germany	≥0,7	C 36 – C 39
	248x365x249	4 / 6	Germany	≥0,5	C 40 – C 43
	248x425x248	4 - 8	Germany	≥0,8	C 44 – C 47
	248x425x248	4 - 8	Germany	≥0,8	C 48 – C 51
	500x200x315	4 - 8	Germany	≥0,6	C 52 – C 55
	500x200x300	4 - 10	France	≥0,7	C 56 – C 59
	500x200x315	2 - 8	France	≥0,7	C 60 – C 63
	560x200x275	4 - 8	France	≥0,7	C 64 / C 65
	255x120x118	2 - 12	Italy	≥1,0	C66 - C68
	275x130x94	6 - 20	Spain	≥0,8	C 69 / C 71
	220x190x290	6 - 10	Portugal	≥0,7	C 72 – C 75
	253x300x240	2 - 6	Austria	≥0,8	C 76 – C 79
	250x440x250	6 - 10	Austria	≥0,7	C 80 – C 83
	230x108x55	2 - 8	Denmark	≥1,4	C 84 / C 85
	365x248x245	8	Austria	≥0,6	C 86 / C 89
	240x175x113	10	Germany	≥0,9	C 90 / C 93

fischer injection system FIS V Plus for masonry

Intended Use
Overview of assessed bricks part 1

Annex B 13

Table B14.1: Overview of assessed bricks part 2

Kind of masonry	Brick format [mm]	Mean compressive strength [N/mm²]	Main country of origin	Mean gross density ρ [kg/dm³]	Annex
Horizontal perforated brick LLz					
Horizontal perforated brick LLz	248x78x250	2 - 6	Italy	≥0,7	C 94 / C 95
	128x88x275	2	Spain	≥0,8	C 96 / C 97
Light-weight concrete hollow block Hbl					
Light-weight concrete hollow block Hbl	362x240x240	2 / 4	Germany	≥1,0	C 98 – C 101
	500x200x200	2 - 6	France	≥1,0	C 102 / C 103
	440x215x215	4 - 10	Ireland	≥1,2	C 104 – C 107
Light-weight concrete solid block Vbl					
Light-weight concrete solid block Vbl	≥ 372x300x254	2	Germany	≥0,6	C 108 / C 109
	≥ 250x240x239	4 - 8	Germany	≥1,6	C 110 – C 113
	≥ 440x100x215	4 - 10	Ireland	≥2,0	C 114 / C 115
	≥ 440x95x215	6 - 12	England	≥2,0	C 116 / C 117
Autoclaved aerated concrete (AAC)					
PP2 / AAC	-	2	Germany	0,35	C 118 – C 122
PP4 / AAC	-	4	Germany	0,5	C 118 – C 122
PP6 / AAC	-	6	Germany	0,65	C 118 – C 122

fischer injection system FIS V Plus for masonry

Intended Use
Overview of assessed bricks part 2

Annex B 14

Table B15.1: Overview dimensions of perforated and hollow bricks part 1

Solid calcium silicate brick KS, 8DF,
EN 771-2:2011+A1:2015 according to Annex C 16

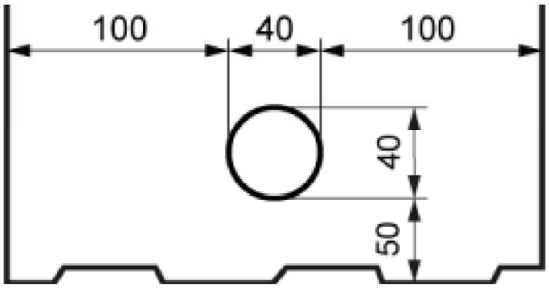

Perforated calcium silicate brick KSL, 3DF,
EN 771-2:2011+A1:2015; e.g. KS Wemding
according to Annex C 24

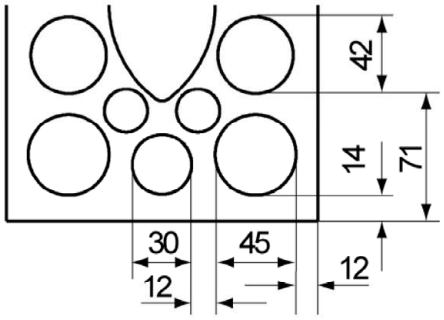

Vertical perforated brick HLz, EN 771-1:2011+A1:2015: e.g. Wienerberger, Poroton according to Annex C 28

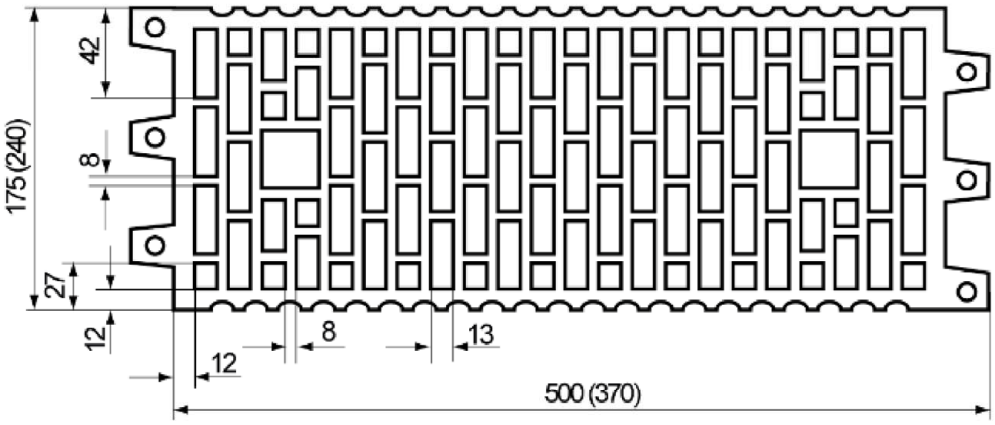

Vertical perforated brick HLz, 2DF,
EN 771-1:2011+A1:2015; e.g. Wienerberger
according to Annex C 30

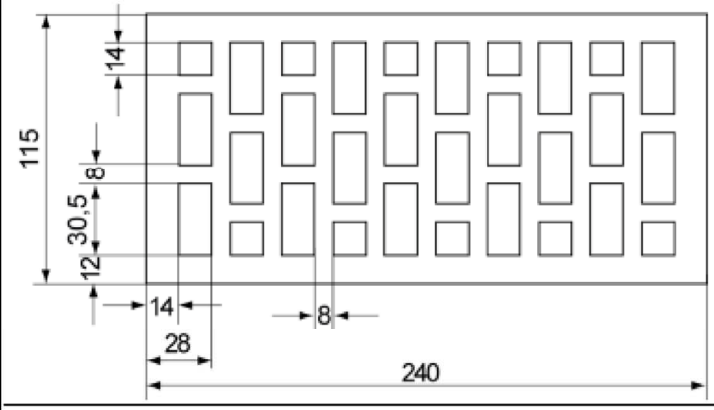

Vertical perforated brick HLz, U8,
EN 771-1:2011+A1:2015; according to Annex C 32

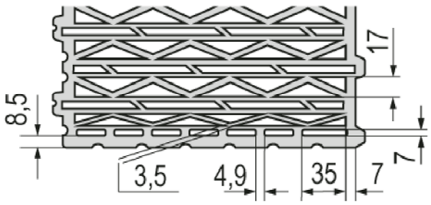

Measures in [mm]

Figures not to scale

fischer injection system FIS V Plus for masonry

Intended Use
Overview dimensions of perforated and hollow bricks part 1

Annex B 15

Table B16.1: Overview dimensions of perforated and hollow bricks part 2

Vertical perforated brick HLz, T10, T11, EN 771-1:2011+A1:2015; according to Annex C36

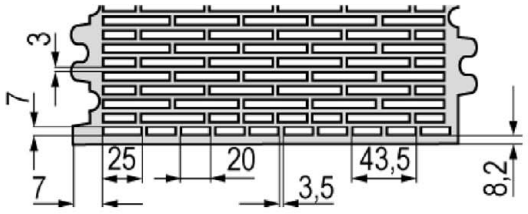

Vertical perforated brick HLz, T7 PF, filled with perlit, EN 771-1:2011+A1:2015; according to Annex C 40

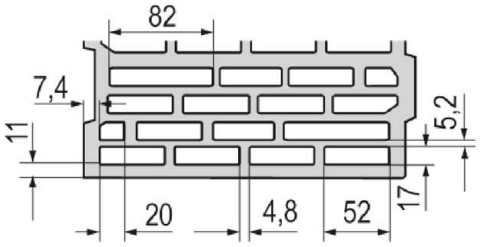

Vertical perforated brick HLz, T9 MW, filled with mineral wool, EN 771-1:2011+A1:2015; according to Annex C 44

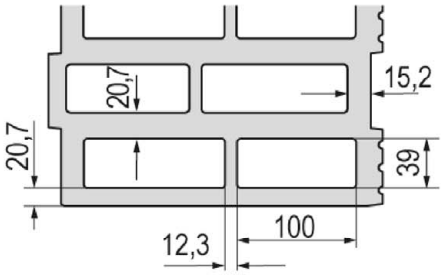

Vertical perforated brick HLz, FZ 7, filled with mineral wool, EN 771-1:2015; according to Annex C 48

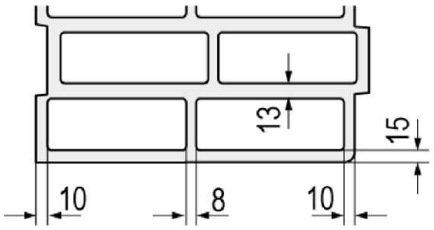

Vertical perforated brick HLz, EN 771-1:2011+A1:2015; e.g. Bouyer Leroux; According to Annex C 52

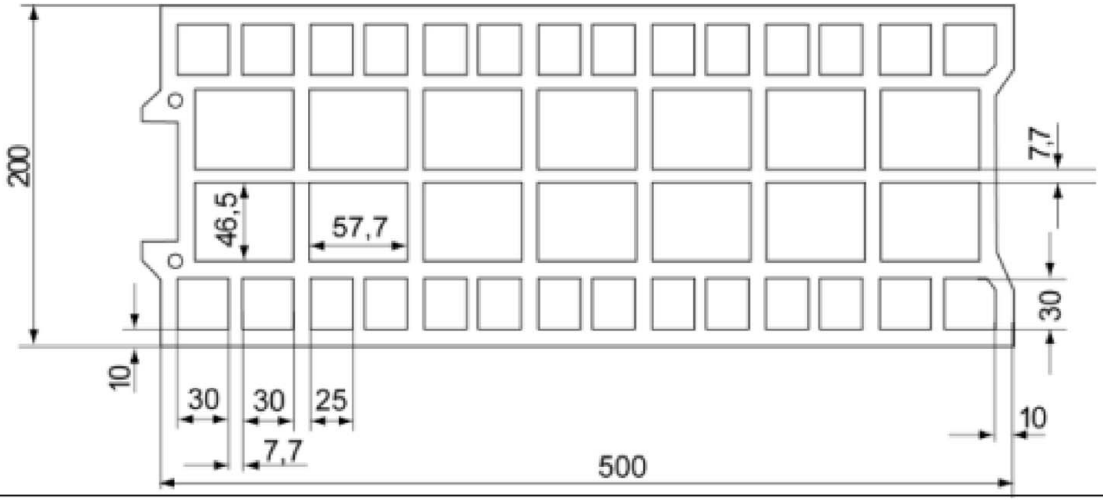

Measures in [mm]

Figures not to scale

fischer injection system FIS V Plus for masonry	**Annex B 16**
Intended Use Overview dimensions of perforated and hollow bricks part 2	

Table B17.1: Overview dimensions of perforated and hollow bricks part 3

Vertical perforated brick HLz, EN 771-1:2011+A1:2015; e.g. Wienerberger according to Annex C 56

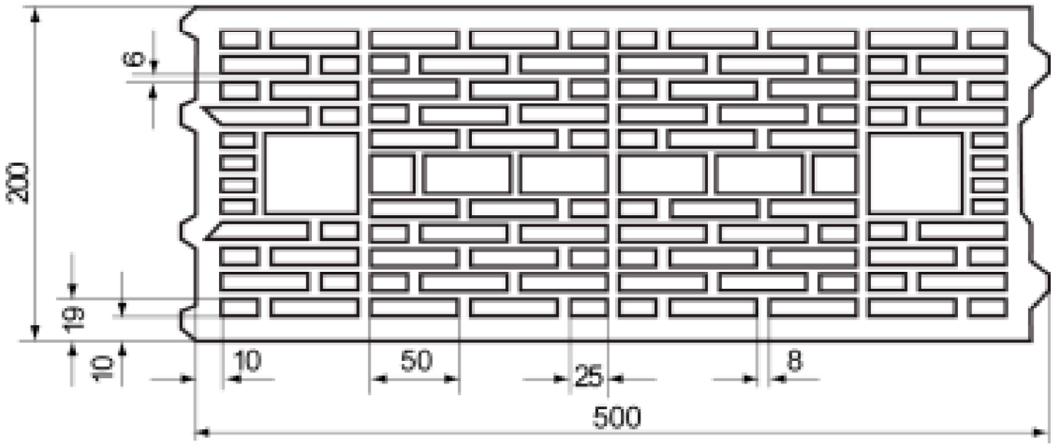

Vertical perforated brick HLz, EN 771-1:2011+A1:2015; e.g. Terreal according to Annex C 60

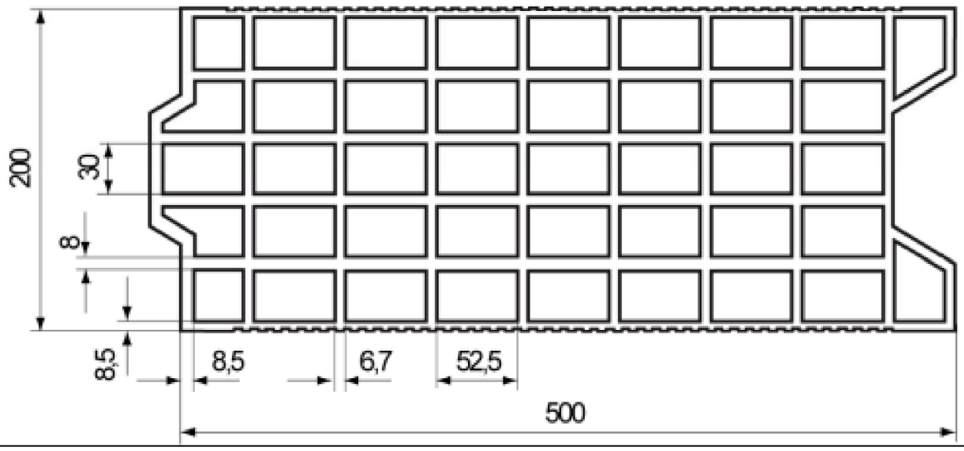

Vertical perforated brick HLz, EN 771-1:2011+A1:2015; e.g. Imery according to Annex C 64

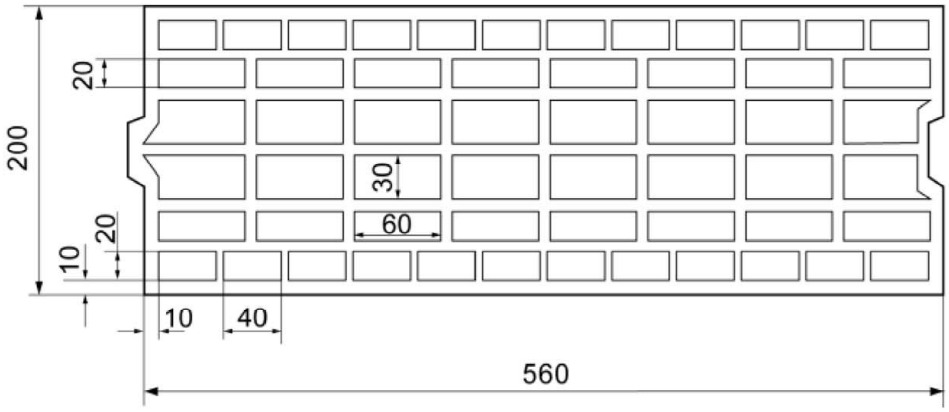

Measures in [mm]

Figures not to scale

fischer injection system FIS V Plus for masonry

Intended Use
Overview dimensions of perforated and hollow bricks part 3

Annex B 17

Table B18.1: Overview dimensions of perforated and hollow bricks part 4

Vertical perforated brick HLz,
EN 771-1:2011+A1:2015;
e.g. Wienerberger according to Annex C 66

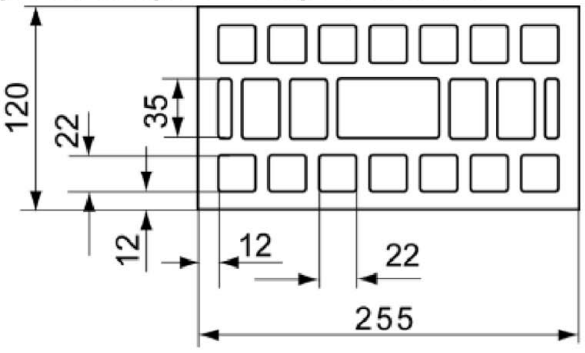

Vertical perforated brick HLz,
EN 771-1:2011+A1:2015;
e.g. Cermanica Farreny S.A. according to Annex C 69

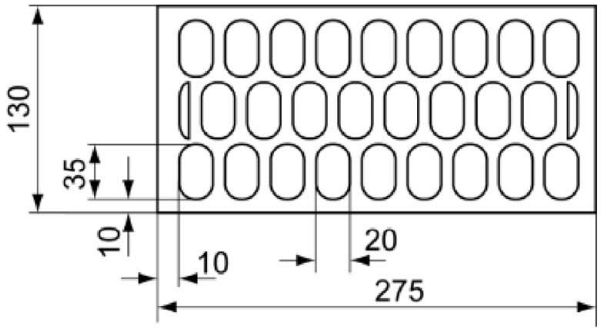

Vertical perforated brick HLz,
EN 771-1:2011+A1:2015;
e.g. Perceram according to Annex C 72

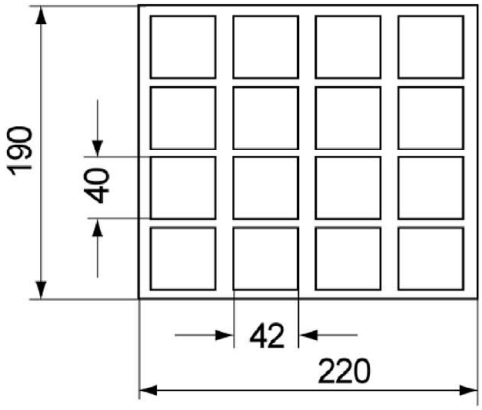

Vertical perforated brick HLz,
EN 771-1:2011+A1:2015;
e.g. Ziegelwerk Brenna according to Annex C 76

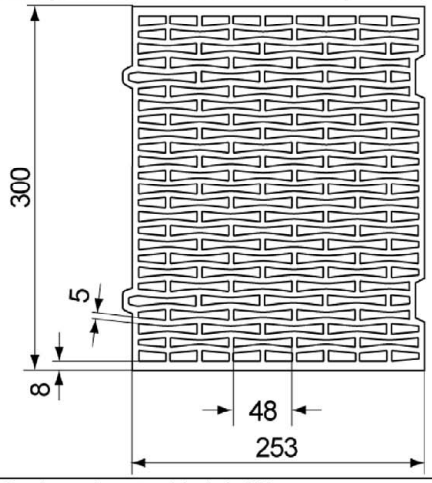

Vertical perforated brick HLz, Porotherm W 44, filled with mineral wool, EN 771-1:2011+A1:2015 according to Annex C 80

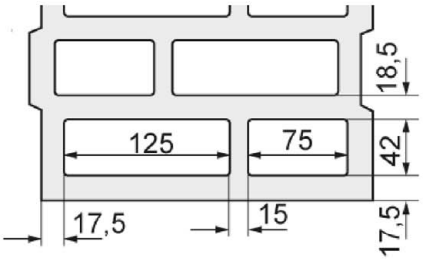

Vertical perforated brick HLz,
EN 771-1:2011+A1:2015;
e.g. Wienerberger according to Annex C 84

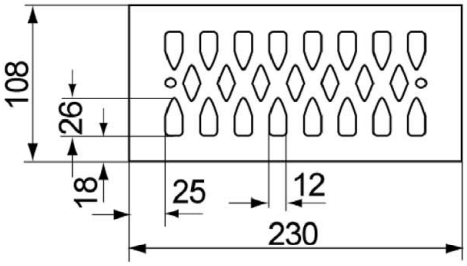

Measures in [mm]

Figures not to scale

fischer injection system FIS V Plus for masonry

Intended Use
Overview dimensions of perforated and hollow bricks part 4

Annex B 18

Table B19.1: Overview dimensions of perforated and hollow bricks part 5

Vertical perforated brick filled with mineral wool,
EN 771-1:2011+A1:2015; according to Annex C 86

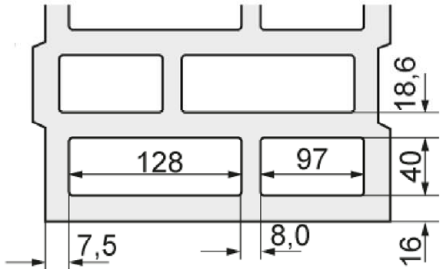

Vertical perforated brick HLz,
EN 771-1:2011+A1:2015;
e.g. Wienerberger according to Annex C 90

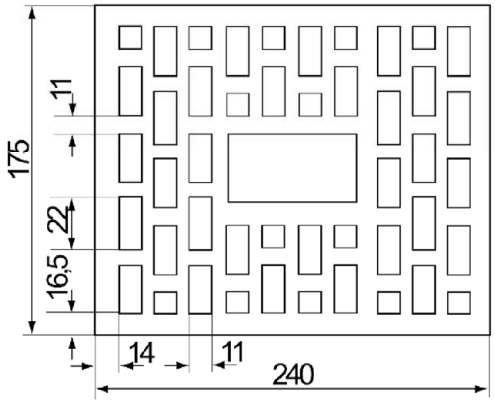

Horizontal perforated brick LLz,
EN 771-1:2011+A1:2015; according to Annex C 94

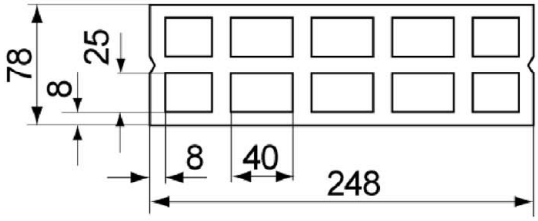

Horizontal perforated brick LLz,
EN 771-1:2011+A1:2015;
e.g. Cermanica Farreny S.A according to Annex C 96

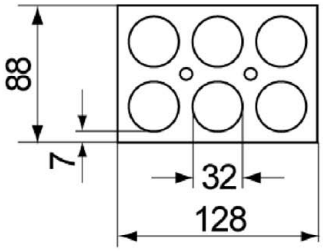

Light-weight concrete hollow block Hbl,
EN 771-3:2011+A1:2015; according to Annex C 98

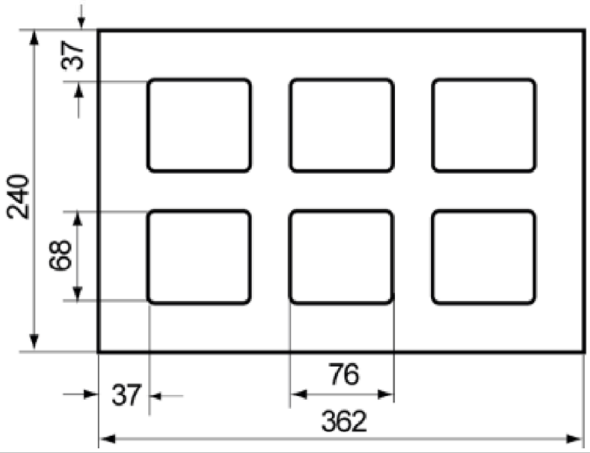

Light-weight concrete hollow block Hbl,
EN 771-3:2011+A1:2015;
e.g. Sepa according to Annex C 102

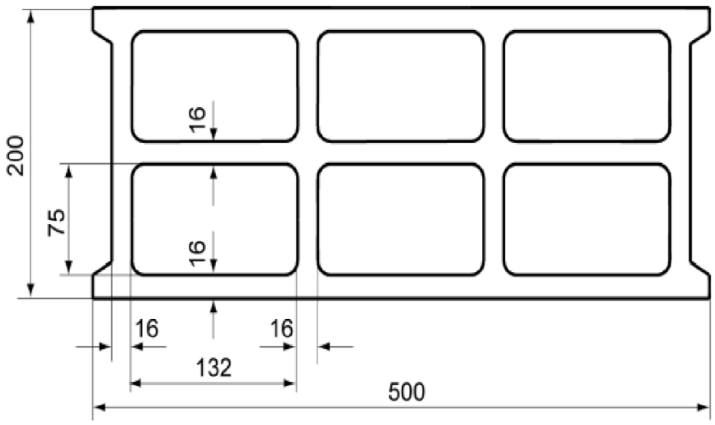

Measures in [mm]
Figures not to scale

fischer injection system FIS V Plus for masonry

Intended Use
Overview dimensions of perforated and hollow bricks part 5

Annex B 19

Table B20.1: Overview dimensions of perforated and hollow bricks part 6

Light-weight concrete hollow block Hbl,
EN 771-3:2011+A1:2015
e.g. Roadstone wood according to Annex C 104

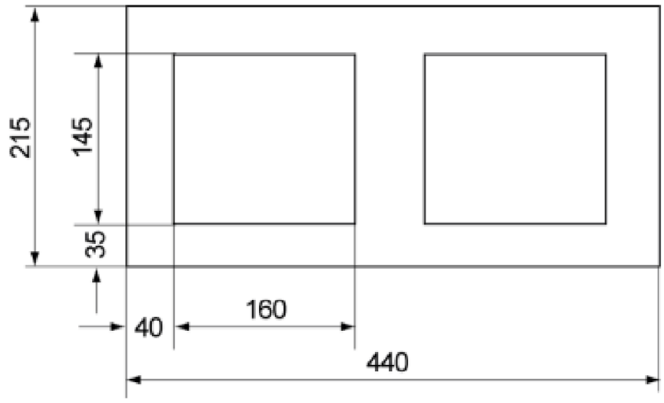

Light-weight concrete hollow block Hbl,
EN 771-3:2011+A1:2015
e.g. Sepa according to Annex C 108

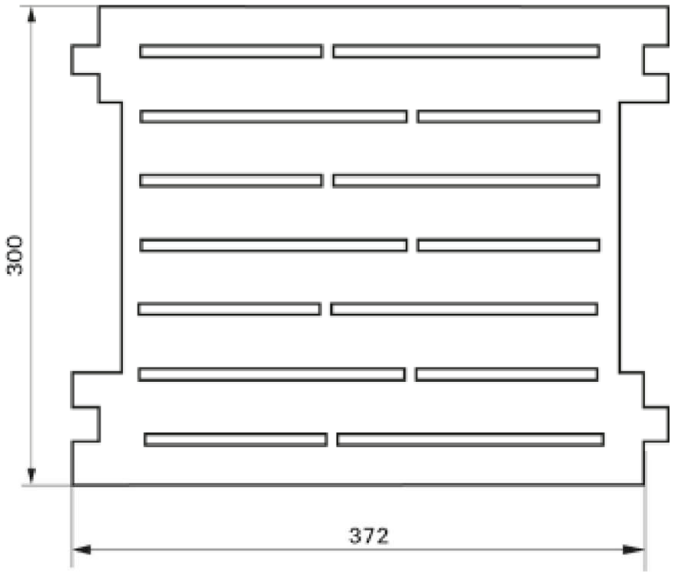

Light-weight concrete solid block Vbl,
EN 771-3:2011+A1:2015;
e.g. Sepa according to Annex C 110

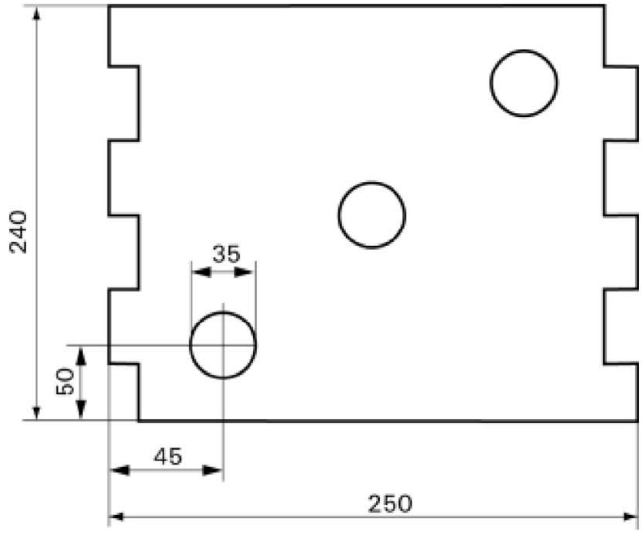

Measures in [mm]
Figures not to scale

fischer injection system FIS V Plus for masonry

Intended Use
Overview dimensions of perforated and hollow bricks part 6

Annex B 20

Spacing and edge distance part 1

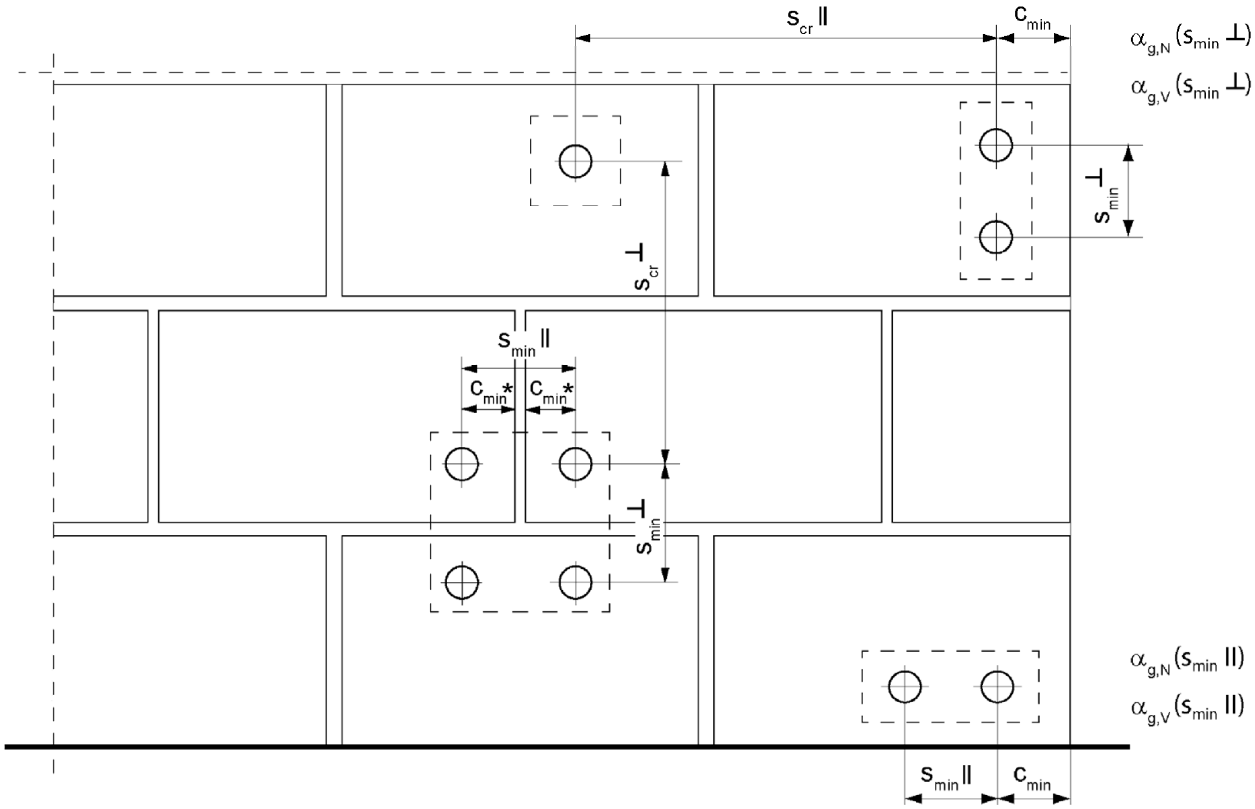

* Only, if vertical joints are not completely filled with mortar

s_{min} ‖	=	Minimum spacing parallel to horizontal joint
s_{min} ⊥	=	Minimum spacing perpendicular to horizontal joint
s_{cr} ‖	=	Characteristic spacing parallel to horizontal joint
s_{cr} ⊥	=	Characteristic spacing perpendicular to horizontal joint
$c_{cr} = c_{min}$	=	Edge distance
$\alpha_{g,N}$ (s_{min} ‖)	=	Group factor for tension load, anchor group parallel to horizontal joint
$\alpha_{g,V}$ (s_{min} ‖)	=	Group factor for shear load, anchor group parallel to horizontal joint
$\alpha_{g,N}$ (s_{min} ⊥)	=	Group factor for tension load, anchor group perpendicular to horizontal joint
$\alpha_{g,V}$ (s_{min} ⊥)	=	Group factor for shear load, anchor group perpendicular to horizontal joint

Figures not to scale

fischer injection system FIS V Plus for masonry

Intended Use
Spacing and edge distance part 1

Annex B 21

Spacing and edge distance part 2

For $s \geq s_{cr}$: $\alpha_g = 2$

For $s_{min} \leq s < s_{cr}$: α_g according to installation parameters of brick Annex C

Group of 2 anchors

$N^g_{Rk} = \alpha_{g,N} \cdot N_{Rk}$; $V^g_{Rk,b} = V^g_{Rk,c,II} = V^g_{Rk,c,\perp} = \alpha_{g,V} \cdot V_{Rk}$

Group of 4 anchors

$N^g_{Rk} = \alpha_{g,N}\ (s_{min}II) \cdot \alpha_{g,N}\ (s_{min}\perp) \cdot N_{Rk}$;

$V^g_{Rk,b} = V^g_{Rk,c,II} = V^g_{Rk,c,\perp} = \alpha_{g,V}\ (s_{min}II) \cdot \alpha_{g,V}\ (s_{min}\perp) \cdot V_{Rk}$

with N_{Rk} and $\alpha_{g,N}$ depending on $s_{min}II$ or $s_{min}\perp$ acc. to Annex C

with V_{Rk} and $\alpha_{g,V}$ depending on $s_{min}II$ or $s_{min}\perp$ acc. to Annex C

Table C1.1: Characteristic resistance to **steel failure** of a single anchor under **tension loading** of **fischer anchor rods** and **standard threaded rods**

Anchor rod / standard threaded rod				**M6**	**M8**[3]	**M10**[3]	**M12**	**M16**
Characteristic resistance to steel failure under tension loading								
Characteristic resistance $N_{Rk,s}$	Steel zinc plated	Property class	4.6	[kN]	8,0	14,6(13,2)	23,2(21,4)	33,7	62,8
			4.8		8,0	14,6(13,2)	23,2(21,4)	33,7	62,8
			5.8		10,0	18,3(16,6)	29,0(26,8)	42,1	78,5
			8.8		16,0	29,2(26,5)	46,4(42,8)	67,4	125,6
	Stainless steel R and High corrosion resistant steel HCR		50		10,0	18,3	29,0	42,1	78,5
			70		14,0	25,6	40,6	59,0	109,9
			80		16,0	29,2	46,4	67,4	125,6
Partial factors [1]								
Partial factors $\gamma_{Ms,N}$	Steel zinc plated	Property class	4.6	[-]	2,00			
			4.8		1,50			
			5.8		1,50			
			8.8		1,50			
	Stainless steel R and High corrosion resistant steel HCR		50		2,86			
			70		1,50[2] / 1,87			
			80		1,60			

[1] In absence of other national regulations

[2] Only for fischer FIS A made of high corrosion resistant steel HCR

[3] Values in brackets are valid for undersized threaded rods with smaller stress area A_s for hot-dip galvanised standard threaded rods according to EN ISO 10684:2004+AC:2009

fischer injection system FIS V Plus for masonry

Performance
Characteristic resistance to steel failure of a single anchor under tension loading of fischer anchor rods and standard threaded rods

Annex C 1

Table C2.1: Characteristic resistance to **steel failure** of a single anchor under **shear loading** with and without lever arm of **fischer anchor rods** and **standard threaded rods**

Anchor rod / standard threaded rod				**M6**	**M8**[3]	**M10**[3]	**M12**	**M16**
Characteristic resistance to steel failure under shear loading								
without lever arm								
Characteristic resistance $V_{Rk,s}$	Steel zinc plated	Property class	4.6	[kN]	4,8	8,7(7,9)	13,9(12,8)	20,2	37,6
			4.8		4,8	8,7(7,9)	13,9(12,8)	20,2	37,6
			5.8		6,0	10,9(9,9)	17,4(16,0)	25,2	47,1
			8.8		8,0	14,6(13,2)	23,2(21,4)	33,7	62,8
	Stainless steel R and High corrosion resistant steel HCR		50		5,0	9,1	14,5	21,0	39,2
			70		7,0	12,8	20,3	29,5	54,9
			80		8,0	14,6	23,2	33,7	62,8
with lever arm								
Characteristic resistance $M^0_{Rk,s}$	Steel zinc plated	Property class	4.6	[Nm]	6,1	14,9(12,9)	29,9(26,5)	52,3	132,9
			4.8		6,1	14,9(12,9)	29,9(26,5)	52,3	132,9
			5.8		7,6	18,7(16,1)	37,3(33,2)	65,4	166,2
			8.8		12,2	29,9(25,9)	59,8(53,1)	104,6	265,9
	Stainless steel R and High corrosion resistant steel HCR		50		7,6	18,7	37,3	65,4	166,2
			70		10,6	26,2	52,3	91,5	232,6
			80		12,2	29,9	59,8	104,6	265,9
Partial factors[1]								
Partial factors $\gamma_{Ms,V}$	Steel zinc plated	Property class	4.6	[-]	1,67			
			4.8		1,25			
			5.8		1,25			
			8.8		1,25			
	Stainless steel R and High corrosion resistant steel HCR		50		2,38			
			70		1,25[2] / 1,56			
			80		1,33			

[1] In absence of other national regulations

[2] Only for fischer FIS A made of high corrosion resistant steel HCR

[3] Values in brackets are valid for undersized threaded rods with smaller stress area A_s for hot-dip galvanised standard threaded rods (M8 resp. M10) according to EN ISO 10684:2004+AC:2009.

fischer injection system FIS V Plus for masonry

Performance
Characteristic resistance to steel failure of a single anchor under shear loading with and without lever arm of fischer anchor rods and standard threaded rods

Annex C 2

Table C3.1: Characteristic resistance to **steel failure** of a single anchor under **tension / shear loading** of **internal threaded anchors FIS E**

fischer internal threaded anchor FIS E					**M6**	**M8**	**M10**	**M12**
Characteristic resistance to steel failure under tension loading, decisive values of sleeve and screw/threaded rod								
Characteristic resistance with screw	$N_{Rk,s}$	Property class	4.6	[kN]	8,0	14,6	23,2	33,7
		Property class	5.8		10,0	18,3	29,0	42,1
		Property class 70	R		14,0	25,6	40,6	59,0
			HCR		14,0	25,6	40,6	59,0
Partial factors[1)]								
Partial factors	$\gamma_{Ms,N}$	Property class	4.6	[-]	2,00			
		Property class	5.8		1,50			
		Property class 70	R		1,87			
			HCR		1,87			
Characteristic resistance to steel failure under shear loading; decisive values of sleeve and screw/threaded rod								
without lever arm								
Characteristic resistance with screw	$V_{Rk,s}$	Property class	4.6	[kN]	4,8	8,7	13,9	20,2
		Property class	5.8		5	9	15	21
		Property class 70	R		7,0	12,8	20,3	29,5
			HCR		7,0	12,8	20,3	29,5
with lever arm								
Characteristic resistance	$M^0_{Rk,s}$	Property class	4.6	[Nm]	6,1	14,9	29,9	52,3
		Property class	5.8		7,6	18,7	37,3	65,4
		Property class 70	R		10,6	26,2	52,3	91,5
			HCR		10,6	26,2	52,3	91,5
Partial factors[1)]								
Partial factors	$\gamma_{Ms,V}$	Property class	4.6	[-]	1,67			
		Property class	5.8		1,25			
		Property class 70	R		1,56			
			HCR		1,56			

[1)] In absence of other national regulations

fischer injection system FIS V Plus for masonry

Performance
Characteristic resistance to steel failure of a single anchor under tension / shear loading of internal threaded anchors FIS E

Annex C 3

Solid brick Mz, NF, EN 771-1:2011+A1:2015

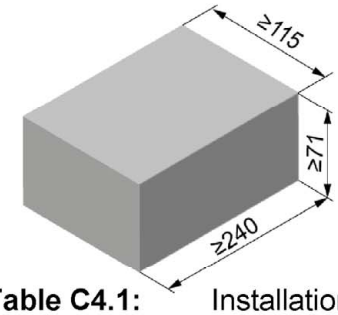

Producer		e.g. Wienerberger		
Nominal dimensions	[mm]	length L	width W	height H
		≥ 240	≥ 115	≥ 71
Mean gross dry density ρ	[kg/dm³]	≥ 1,8		
Mean compressive strength / Min. compressive strength single brick[1)]	[N/mm²]	15 / 12 or 25 / 20 35 / 28		
Standard or annex		EN 771-1:2011+A1:2015		

Table C4.1: Installation parameters for edge distance c=100mm

Anchor rod			**M6**	**M8**	**M10**	**M12**	**-**		**-**	
Internal threaded anchor FIS E			**-**	**-**	**-**	**-**	**M6**	**M8**	**M10**	**M12**
							11x85		**15x85**	
Anchor rod and internal threaded anchor FIS E without perforated sleeve										
Effective anchorage depth	h_{ef}	[mm]	50	50	50	50	85			
			80	80	80	80				
			200	200	200	200				
Max. installation torque	max T_{inst}	[Nm]	4	10			4	10		
General installation parameters										
Edge distance	$c_{min} = c_{cr}$	[mm]	100				100			
Edge distance h_{ef}=200	$c_{min} = c_{cr}$		150				-[2)]			
Spacing	s_{min} II,N		60				60			
	h_{ef}=200 s_{min} II,N		240				-[2)]			
	s_{min} II,V		240				240			
	s_{cr} II		240				240			
	s_{cr} ⊥ = s_{min} ⊥		75				75			
Drilling method										
Hammer drilling with hard metal hammer drill										

1) The compressive strength of the single brick must not be less than 80% of the mean compressive strength.

2) No performance assessed

Table C4.2: Group factors

Anchor rods			**M6**	**M8**	**M10**	**M12**	**-**		**-**	
Internal threaded anchor FIS E			**-**	**-**	**-**	**-**	**M6**	**M8**	**M10**	**M12**
							11x85		**15x85**	
Edge distance	c_{min}	[mm]	**100**							
Group factor	$\alpha_{g,N}$ (s_{min} II)	[-]	1,5							
	$\alpha_{g,V}$ (s_{min} II)		2,0							
	h_{ef}=200 $\alpha_{g,N}$ (s_{min} II)		1,5							
	h_{ef}=200 $\alpha_{g,V}$ (s_{min} II)		2,0							
	$\alpha_{g,N}$ (s_{min} ⊥)		2,0							
	$\alpha_{g,V}$ (s_{min} ⊥)		2,0							
	h_{ef}=200 $\alpha_{g,N}$ (s_{min} ⊥)		2,0							
	h_{ef}=200 $\alpha_{g,V}$ (s_{min} ⊥)		2,0							

fischer injection system FIS V Plus for masonry

Performance
Solid brick Mz, NF, dimensions, installation parameters c=100mm

Annex C 4

Solid brick Mz, NF, EN 771-1:211+A1:2015

Table C5.1: Characteristic resistance to pull-out failure or brick breakout failure of a single anchor under tension loading for edge distance c=100mm

Anchor rod	**M6**	**M8**	**M10**	**M12**	**-**		**-**	
Internal threaded anchor FIS E	**-**	**-**	**-**	**-**	**M6**	**M8**	**M10**	**M12**
					11x85		**15x85**	

Tension resistance $N_{Rk} = N_{Rk,p} = N_{Rk,b} = N_{Rk,p,c} = N_{Rk,b,c}$ [kN] depending on the mean compressive strength f_b; Installation and use condition w/w, w/d, d/d; (temperature range 50/80°C) [2)]

Mean compressive strength / Min. compressive strength single brick [1)]	Use con-ditions	Effective anchorage depth h_{ef} [mm]								
		≥50	≥50	50	80	200	50	80	200	85
15 / 12 N/mm²	w/w w/d	2,5	2,5	2,0	3,0	7,5	2,0	3,5	5,0	3,5
	d/d	4,0	4,0	3,5	5,0	12,0	3,0	5,5	8,0	5,5
25 / 20 N/mm²	w/w w/d	3,5	3,5	3,0	4,5	11,0	3,0	5,0	7,0	5,0
	d/d	5,5	5,5	5,0	7,0	12,0	4,5	8,0	11,5	8,0

1) The compressive strength of the single brick must not be less than 80% of the mean compressive strength.
2) For temperature range 72/120°C: $N_{Rk\,(72/120°C)} = 0{,}83 \cdot N_{Rk\,(50/80°C)}$.

Table C5.2: Characteristic resistance to local brick failure or brick edge failure of a single anchor under shear loading for edge distance c=100mm

Anchor rod	**M6**	**M8**	**M10**	**M12**	**-**		**-**	
Internal threaded anchor FIS E	**-**	**-**	**-**	**-**	**M6**	**M8**	**M10**	**M12**
					11x85		**15x85**	

Shear resistance $V_{Rk} = V_{Rk,b} = V_{Rk,c,II} = V_{Rk,c,\perp}$ [kN] depending on the mean compressive strength f_b; Installation and use condition w/w, w/d, d/d; (temperature range 50/80°C and 72/120°C)

Mean compressive strength / Min. compressive strength single brick [1)]	Use con-ditions	Effective anchorage depth h_{ef} [mm]						
		≥50	≥50	≥50	200	≥50	200	85
15 / 12 N/mm²	w/w w/d d/d	2,5	2,5	4,0	8,5	4,0	11,5	2,5
25 / 20 N/mm²	w/w w/d d/d	4,0	4,0	6,0	12,0	5,5	12,0	4,0

1) The compressive strength of the single brick must not be less than 80% of the mean compressive strength.

Factor for job site tests and displacements see annex C 123.

Solid brick Mz, NF, EN 771-1:2011+A1:2015

Table C6.1: Installation parameters for edge distance c=60mm

Anchor rod			**M6**	**M8**	**M10**	**M12**	**M16**	**-**		**-**	
Internal threaded anchor FIS E			-	-	-	-	-	**M6**	**M8**	**M10**	**M12**
								11x85		**15x85**	
Anchor rod and internal threaded anchor FIS E without perforated sleeve											
Effective anchorage depth	h_{ef}	[mm]	50	50	50	50	50	85			
			100	100	100	100	100				
			200	200	200	200	200				
Max. installation torque	max T_{inst}	[Nm]	4	10				4	10		
General installation parameters											
Edge distance	$c_{min} = c_{cr}$	[mm]	60								
Edge distance h_{ef}=200	c_{min}	[mm]	60								
Spacing	s_{min} II,N	[mm]	80								
	h_{ef}=200 s_{min} II,N	[mm]	80								
	s_{min} II,V	[mm]	80								
	s_{cr} II	[mm]	3x h_{ef}								
	s_{min} ⊥	[mm]	80								
	s_{cr} ⊥	[mm]	3x h_{ef}								
Drilling method											
Hammer drilling with hard metal hammer drill											

Table C6.2: Group factors

Anchor rods			**M6**	**M8**	**M10**	**M12**	**M16**	**-**		**-**	
Internal threaded anchor FIS E			-	-	-	-	-	**M6**	**M8**	**M10**	**M12**
								11x85		**15x85**	
Edge distance	c_{min}	[mm]	60								
Group factor	$\alpha_{g,N}$ (s_{min} II)	[-]	0,6								
	$\alpha_{g,V}$ (s_{min} II)	[-]	1,3								
	h_{ef}=200 $\alpha_{g,N}$ (s_{min} II)	[-]	1,4								
	h_{ef}=200 $\alpha_{g,V}$ (s_{min} II)	[-]	1,5								
	$\alpha_{g,N}$ (s_{min} ⊥)	[-]	0,3								
	$\alpha_{g,V}$ (s_{min} ⊥)	[-]	1,3								
	h_{ef}=200 $\alpha_{g,N}$ (s_{min} ⊥)	[-]	2,0								
	h_{ef}=200 $\alpha_{g,V}$ (s_{min} ⊥)	[-]	1,1								

fischer injection system FIS V Plus for masonry

Performance
Solid brick Mz, NF, dimensions, installation parameters c=60mm

Annex C 6

Solid brick Mz, NF, EN 771-1:2011+A1:2015

Table C7.1: Characteristic resistance to pull-out failure or brick breakout failure of a single anchor under tension loading for edge distance c=60mm

Anchor rod	**M6**	**M8**	**M10**	**M12**	**M16**	**-**		**-**	
Internal threaded anchor FIS E	-	-	-	-	-	**M6**	**M8**	**M10**	**M12**
						11x85		**15x85**	

Tension resistance $N_{Rk} = N_{Rk,p} = N_{Rk,b} = N_{Rk,p,c} = N_{Rk,b,c}$ [kN] depending on the mean compressive strength f_b; Installation and use condition w/w, w/d, d/d; (temperature range 50/80°C) [3]

Mean compressive strength / Min. compressive strength single brick [1]	Use conditions	Effective anchorage depth h_{ef} [mm]													
		50	100	50	100	50	100	200	50	100	200	50	100	200	85
15 / 12 N/mm²	w/w w/d	1,5		2,0	2,0	2,0	2,5	-[2]	2,0	2,5	-[2]	2,0	5,5	-[2]	-[2]
	d/d	2,5		3,0	4,0	3,0	4,0	9,5	3,0	4,0	9,5	3,0	8,5	9,5	-[2]
25 / 20 N/mm²	w/w w/d	2,0		2,5	3,0	2,5	3,5	-[2]	3,0	3,5	-[2]	3,0	7,5	-[2]	-[2]
	d/d	3,5		4,5	5,5	4,5	5,5	12	4,5	5,5	12	4,5	12	12	-[2]
35 / 28 N/mm²	w/w w/d	2,5		3,0	4,0	3,0	4,0	-[2]	3,5	4,0	-[2]	3,5	9,0	-[2]	-[2]
	d/d	4,0		5,5	6,5	5,5	6,5	12	5,5	6,5	12	5,5	12	12	-[2]

1) The compressive strength of the single brick must not be less than 80% of the mean compressive strength.
2) No performance assessed
3) For temperature range 72/120°C: $N_{Rk\,(72/120°C)} = 0{,}83 \cdot N_{Rk\,(50/80°C)}$.

Table C7.2: Characteristic resistance to local brick failure or brick edge failure of a single anchor under shear loading for edge distance c=60mm

Anchor rod	**M6**	**M8**	**M10**	**M12**	**M16**	**-**		**-**	
Internal threaded anchor FIS E	-	-	-	-	-	**M6**	**M8**	**M10**	**M12**
						11x85		**15x85**	

Shear resistance $V_{Rk} = V_{Rk,b} = V_{Rk,c,II} = V_{Rk,c,\perp}$ [kN] depending on the mean compressive strength f_b; Installation and use condition w/w, w/d, d/d; (temperature range 50/80°C and 72/120°C)

Mean compressive strength / Min. compressive strength single brick [1]	Use conditions	Effective anchorage depth h_{ef} [mm]													
		50	100	50	100	50	100	200	50	100	200	50	100	200	85
15 / 12 N/mm²	w/w w/d d/d	1,2	2,5	1,2	3,0	2,0	3,0	1,5	1,5	3,0	3,0	0,6	3,0	4,5	-[2]
25 / 20 N/mm²		1,5	3,5	1,5	4,5	3,0	4,5	2,5	2,0	4,5	4,5	0,9	4,5	6,0	-[2]
35 / 28 N/mm²		2,0	4,0	2,0	5,0	3,5	5,0	3,0	2,5	5,0	5,0	1,2	5,0	7,5	-[2]

1) The compressive strength of the single brick must not be less than 80% of the mean compressive strength.
2) No performance assessed.

Factor for job site tests and displacements see annex C 123.

fischer injection system FIS V Plus for masonry

Performance
Solid brick Mz, NF, Characteristic resistance under tension and shear loading c=60mm

Annex C 7

Solid brick Mz, 2DF, EN 771-1:2011+A1:2015

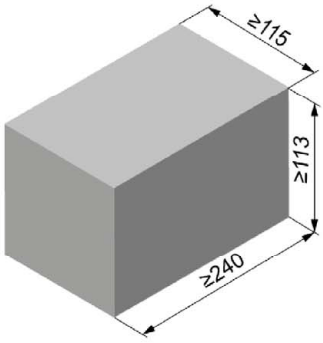

Producer		e.g. Wienerberger		
Nominal dimensions	[mm]	length L	width W	height H
		≥ 240	≥ 115	≥ 113
Mean gross dry density ρ	[kg/dm³]	≥ 1,8		
Mean compressive strength / Min. compressive strength single brick[1)]	[N/mm²]	12,5 / 10 or 20 / 16		
Standard or annex		EN 771-1:2011+A1:2015		

Table C8.1: Installation parameters

Anchor rod			**M6**		**M8**		**M10**		**M12**		**M16**		**-**		**-**	
Internal threaded anchor FIS E			**-**		**-**		**-**		**-**		**-**		**M6**	**M8**	**M10**	**M12**
													11x85		**15x85**	
Anchor rod and internal threaded anchor FIS E without perforated sleeve																
Effective anchorage depth	h_{ef}	[mm]	50	100	50	100	50	100	50	100	50	100	85			
Max. installation torque	max T_{inst}	[Nm]	4		10								4		10	
Anchor rod and internal threaded anchor FIS E with perforated sleeve FIS H 16x85 K																
Effective anchorage depth	h_{ef}	[mm]	-[2)]		85				-[2)]				85		-[2)]	
Max. installation torque	max T_{inst}	[Nm]			10								4	10		
General installation parameters																
Edge distance	$c_{min} = c_{cr}$	[mm]	60													
Spacing	s_{min} ∥	[mm]	120													
	s_{cr} ∥	[mm]	240													
	s_{cr} ⊥ = s_{min} ⊥	[mm]	115													
Drilling method																
Hammer drilling with hard metal hammer drill																

1) The compressive strength of the single brick must not be less than 80% of the mean compressive strength.
2) No performance assessed.

Table C8.2: Group factors

Anchor rods			**M6**	**M8**	**M10**	**M12**	**M16**	**-**		**-**	
Internal threaded anchor FIS E			**-**	**-**	**-**	**-**	**-**	**M6**	**M8**	**M10**	**M12**
								11x85		**15x85**	
Group factor	$\alpha_{g,N}$ (s_{min} ∥)	[-]	1,5								
	$\alpha_{g,V}$ (s_{min} ∥)	[-]	1,4								
	$\alpha_{g,N}$ (s_{min} ⊥)	[-]	2,0								
	$\alpha_{g,V}$ (s_{min} ⊥)	[-]									

fischer injection system FIS V Plus for masonry

Performance
Solid brick Mz, 2DF, dimensions, installation parameters

Annex C 8

Solid brick Mz, 2DF, EN 771-1:2011+A1:2015

Table C9.1: Characteristic resistance to pull-out failure or brick breakout failure of a single anchor under tension loading

Anchor rod	**M6**	**M8**	**M10**	**M12**	**M16**	**-**		**-**		**M8**	**M10**	**-**	
Internal threaded anchor FIS E	-	-	-	-	-	**M6**	**M8**	**M10**	**M12**	-	-	**M6**	**M8**
						11x85		**15x85**				**11x85**	
Perforated sleeve FIS H K	-	-	-	-	-	-		-		**16x85**			

Tension resistance $N_{Rk} = N_{Rk,p} = N_{Rk,b} = N_{Rk,p,c} = N_{Rk,b,c}$ [kN] depending on the mean compressive strength f_b; Installation and use condition w/w, w/d, d/d; (temperature range 50/80°C)[2)]

Mean compressive strength / Min. compressive strength single brick [1)]	Use conditions	Effective anchorage depth h_{ef} [mm]											
		50	100	50	100	50	100	50	100	50	100	85	
12,5 / 10 N/mm²	w/w w/d	1,5	2,5	1,5	2,5	1,5	3,0	2,0	3,5	2,0	3,5	2,0	1,5
	d/d	3,0	4,0	3,0	4,0	3,0	4,5	3,0	5,5	3,0	5,5	3,0	3,0
20 / 16 N/mm²	w/w w/d	2,5	4,0	2,5	4,0	2,5	4,5	3,5	5,5	3,5	5,5	3,5	2,5
	d/d	4,5	7,0	4,5	7,0	4,5	7,5	5,5	8,0	5,5	8,0	5,5	4,5

1) The compressive strength of the single brick must not be less than 80% of the mean compressive strength.
2) For temperature range 72/120°C: $N_{Rk\,(72/120°C)} = 0{,}83 \cdot N_{Rk\,(50/80°C)}$.

Table C9.2: Characteristic resistance to local brick failure or brick edge failure of a single anchor under shear loading

Anchor rod	**M6**	**M8**	**M10**	**M12**	**M16**	**-**		**-**		**M8**	**M10**	**-**	
Internal threaded anchor FIS E	-	-	-	-	-	**M6**	**M8**	**M10**	**M12**	-	-	**M6**	**M8**
						11x85		**15x85**				**11x85**	
Perforated sleeve FIS H K	-	-	-	-	-	-		-		**16x85**			

Shear resistance $V_{Rk} = V_{Rk,b} = V_{Rk,c,II} = V_{Rk,c,\perp}$ [kN] depending on the mean compressive strength f_b; Installation and use condition w/w, w/d, d/d; (temperature range 50/80°C and 72/120°C)

Mean compressive strength / Min. compressive strength single brick [1)]	Use conditions	Effective anchorage depth h_{ef} [mm]												
		≥ 50					85							
12,5 / 10 N/mm²	w/w w/d	2,5	3,0	3,0	3,5	3,0	2,5	3,0	3,0	3,0	3,0	3,5	2,5	3,0
	d/d													
20 / 16 N/mm²	w/w w/d	4,0	5,0	5,5	5,5	5,0	4,0	5,0	5,0	5,0	5,0	6,0	4,0	5,0
	d/d													

1) The compressive strength of the single brick must not be less than 80% of the mean compressive strength.
Factor for job site tests and displacements see annex C 123.

fischer injection system FIS V Plus for masonry

Performance
Solid brick Mz, 2DF, Characteristic resistance under tension and shear loading

Annex C 9

Solid brick Mz, EN 771-1:2011+A1:2015

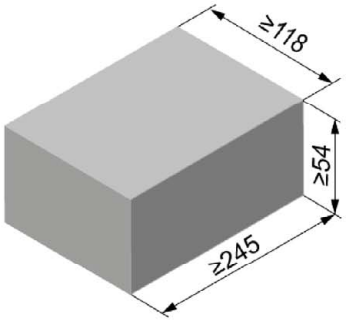

Producer		e.g. Nigra		
Nominal dimensions	[mm]	length L	width W	height H
		≥ 245	≥ 118	≥ 54
Mean gross dry density ρ	[kg/dm³]	≥ 1,8		
Mean compressive strength / Min. compressive strength single brick [1)]	[N/mm²]	12,5 / 10 or 25 / 20		
Standard or annex		EN 771-1:2011+A1:2015		

Table C10.1: Installation parameters

Anchor rod			**M6**		**M8**		**M10**		**M12**		**M16**		**-**		**-**	
Internal threaded anchor FIS E			-		-		-		-		-		**M6**	**M8**	**M10**	**M12**
													11x85		**15x85**	
Anchor rod and internal threaded anchor FIS E without perforated sleeve																
Effective anchorage depth	h_{ef}	[mm]	50	100	50	100	50	100	50	100	50	100	85			
Max. installation torque	max T_{inst}	[Nm]	4		10								4	10		
General installation parameters																
Edge distance	$c_{min} = c_{cr}$	[mm]	60													
Spacing	s_{cr} ∥ = s_{min} ∥	[mm]	245													
	s_{cr} ⊥ = s_{min} ⊥	[mm]	60													
Drilling method																
Hammer drilling with hard metal hammer drill																

[1)] The compressive strength of the single brick must not be less than 80% of the mean compressive strength.

Table C10.2: Group factors

Anchor rods			**M6**	**M8**	**M10**	**M12**	**M16**	**-**		**-**	
Internal threaded anchor FIS E			-	-	-	-	-	**M6**	**M8**	**M10**	**M12**
								11x85		**15x85**	
Group factor	$\alpha_{g,N}$ (s_{min} ∥)	[-]	2								
	$\alpha_{g,V}$ (s_{min} ∥)	[-]	2								
	$\alpha_{g,N}$ (s_{min} ⊥)	[-]	2								
	$\alpha_{g,V}$ (s_{min} ⊥)	[-]	2								

fischer injection system FIS V Plus for masonry

Performance
Solid brick Mz, dimensions, installation parameters

Annex C 10

Solid brick Mz, EN 771-1:2011+A1:2015

Table C11.1: Characteristic resistance to pull-out failure or brick breakout failure of a single anchor under tension loading

Anchor rod		**M6**	**M8**	**M10**	**M12**	**M16**	**-**		**-**	
Internal threaded anchor FIS E		**-**	**-**	**-**	**-**	**-**	**M6**	**M8**	**M10**	**M12**
							11x85		**15x85**	
Tension resistance $N_{Rk} = N_{Rk,p} = N_{Rk,b} = N_{Rk,p,c} = N_{Rk,b,c}$ [kN] depending on the mean compressive strength f_b; Installation and use condition w/w, w/d, d/d; (temperature range 50/80°C) [2)]										
Mean compressive strength / Min. compressive strength single brick [1)]	Use conditions	Effective anchorage depth h_{ef} [mm]								
		≥ 50					85			
12,5 / 10 N/mm²	w/w w/d	0,60	0,90	0,75	0,75	0,75	0,60	0,75		
	d/d	1,20	1,50	1,20	1,20	1,20	1,20	1,20		
25 / 20 N/mm²	w/w w/d	0,90	1,50	1,20	1,20	1,20	0,90	1,20		
	d/d	1,50	2,50	2,00	2,00	2,00	1,50	2,00		

1) The compressive strength of the single brick must not be less than 80% of the mean compressive strength.
2) For temperature range 72/120°C: $N_{Rk\,(72/120°C)} = 0{,}83 \cdot N_{Rk\,(50/80°C)}$.

Table C11.2: Characteristic resistance to local brick failure or brick edge failure of a single anchor under shear loading

Anchor rod		**M6**	**M8**	**M10**	**M12**	**M16**	**-**		**-**	
Internal threaded anchor FIS E		**-**	**-**	**-**	**-**	**-**	**M6**	**M8**	**M10**	**M12**
							11x85		**15x85**	
Shear resistance $V_{Rk} = V_{Rk,b} = V_{Rk,c,II} = V_{Rk,c,\perp}$ [kN] depending on the mean compressive strength f_b; Installation and use condition w/w, w/d, d/d; (temperature range 50/80°C and 72/120°C)										
Mean compressive strength / Min. compressive strength single brick [1)]	Use conditions	Effective anchorage depth h_{ef} [mm]								
		≥ 50					85			
12,5 / 10 N/mm²	w/w w/d d/d	2,0	3,0	4,0	4,5	5,5	2,0	3,0	4,0	4,5
25 / 20 N/mm²	w/w w/d d/d	2,5	4,0	5,5	6,0	8,0	2,5	4,0	5,5	6,0

1) The compressive strength of the single brick must not be less than 80% of the mean compressive strength.
Factor for job site tests and displacements see annex C 123.

fischer injection system FIS V Plus for masonry

Performance
Solid brick Mz, Characteristic resistance under tension and shear loading

Annex C 11

Solid brick Mz, EN 771-1:2011+A1:2015

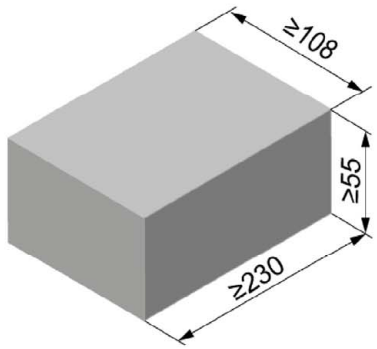

Producer		e.g. Wienerberger		
Nominal dimensions	[mm]	length L	width W	height H
		≥ 230	≥ 108	≥ 55
Mean gross dry density ρ	[kg/dm³]	≥ 1,8		
Mean compressive strength / Min. compressive strength single brick [1)]	[N/mm²]	12,5 / 10 or 25 / 20		
Standard or annex		EN 771-1:2011+A1:2015		

Table C12.1: Installation parameters

Anchor rod			**M6**		**M8**		**M10**		**M12**		**M16**		**-**		**-**	
Internal threaded anchor FIS E			**-**		**-**		**-**		**-**		**-**		**M6**	**M8**	**M10**	**M12**
													11x85		**15x85**	
Anchor rod and internal threaded anchor FIS E without perforated sleeve																
Effective anchorage depth	h_{ef}	[mm]	50	90	50	90	50	90	50	90	50	90	85			
Max. installation torque	max T_{inst}	[Nm]	4		10								4	10		
General installation parameters																
Edge distance	$c_{min} = c_{cr}$	[mm]	60													
Spacing	s_{cr} II = s_{min} II	[mm]	230													
	s_{cr} ⊥ = s_{min} ⊥	[mm]	60													
Drilling method																
Hammer drilling with hard metal hammer drill																

[1)] The compressive strength of the single brick must not be less than 80% of the mean compressive strength.

Table C12.2: Group factors

Anchor rods			**M6**	**M8**	**M10**	**M12**	**M16**	**-**		**-**	
Internal threaded anchor FIS E			**-**	**-**	**-**	**-**	**-**	**M6**	**M8**	**M10**	**M12**
								11x85		**15x85**	
Group factor	$\alpha_{g,N}$ (s_{min} II)	[-]	2								
	$\alpha_{g,V}$ (s_{min} II)										
	$\alpha_{g,N}$ (s_{min} ⊥)										
	$\alpha_{g,V}$ (s_{min} ⊥)										

fischer injection system FIS V Plus for masonry

Performance
Solid brick Mz, dimensions, installation parameters

Annex C 12

Solid brick Mz, EN 771-1:2011+A1:2015

Table C13.1: Characteristic resistance to pull-out failure or brick breakout failure of a single anchor under tension loading

Anchor rod		**M6**	**M8**	**M10**	**M12**	**M16**	**-**		**-**	
Internal threaded anchor FIS E		**-**	**-**	**-**	**-**	**-**	**M6**	**M8**	**M10**	**M12**
							11x85		**15x85**	
Tension resistance $N_{Rk} = N_{Rk,p} = N_{Rk,b} = N_{Rk,p,c} = N_{Rk,b,c}$ [kN] depending on the mean compressive strength f_b; Installation and use condition w/w, w/d, d/d; (temperature range 50/80°C) [2)]										
Mean compressive strength / Min. compressive strength single brick [1)]	Use conditions	Effective anchorage depth h_{ef} [mm]								
		≥ 50					85			
12,5 / 10 N/mm²	w/w w/d	0,60	0,90	0,75	0,75	0,75	0,75			
	d/d	1,20	1,50	1,20	1,20	1,20	1,20			
25 / 20 N/mm²	w/w w/d	0,90	1,50	1,20	1,20	1,20	1,20			
	d/d	1,50	2,50	2,00	2,00	2,00	2,00			

1) The compressive strength of the single brick must not be less than 80% of the mean compressive strength.
2) For temperature range 72/120°C: $N_{Rk\,(72/120°C)} = 0{,}83 \cdot N_{Rk\,(50/80°C)}$.

Table C13.2: Characteristic resistance to local brick failure or brick edge failure of a single anchor under shear loading

Anchor rod		**M6**	**M8**	**M10**	**M12**	**M16**	**-**		**-**	
Internal threaded anchor FIS E		**-**	**-**	**-**	**-**	**-**	**M6**	**M8**	**M10**	**M12**
							11x85		**15x85**	
Shear resistance $V_{Rk} = V_{Rk,b} = V_{Rk,c,II} = V_{Rk,c,\perp}$ [kN] depending on the mean compressive strength f_b; Installation and use condition w/w, w/d, d/d; (temperature range 50/80°C and 72/120°C)										
Mean compressive strength / Min. compressive strength single brick [1)]	Use conditions	Effective anchorage depth h_{ef} [mm]								
		≥ 50					85			
12,5 / 10 N/mm²	w/w w/d d/d	2,0	3,0	4,0	4,5	5,5	2,0	3,0	4,0	4,5
25 / 20 N/mm²	w/w w/d d/d	2,5	4,0	5,5	6,0	8,0	2,5	4,0	5,5	6,0

1) The compressive strength of the single brick must not be less than 80% of the mean compressive strength.
Factor for job site tests and displacements see annex C 123.

fischer injection system FIS V Plus for masonry

Performance
Solid brick Mz, Characteristic resistance under tension and shear loading

Annex C 13

Solid calcium silicate brick KS, NF, EN 771-2:2011+A1:2015

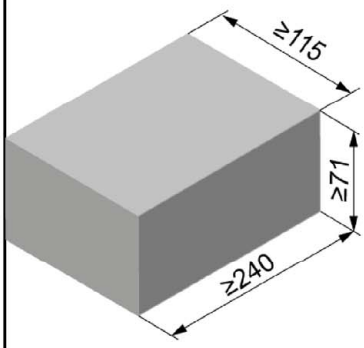

Producer		-		
Nominal dimensions	[mm]	length L	width W	height H
		≥ 240	≥ 115	≥ 71
Mean gross dry density ρ	[kg/dm³]	≥ 1,8		
Mean compressive strength / Min. compressive strength single brick [1)]	[N/mm²]	15 / 12 or 25 / 20 or 35 / 28		
Standard or annex		EN 771-2:2011+A1:2015		

Table C14.1: Installation parameters

Anchor rod			**M6**		**M8**		**M10**		**M12**		**M16**		**-**		**-**	
Internal threaded anchor FIS E			-		-		-		-		-		**M6**	**M8**	**M10**	**M12**
													11x85		**15x85**	
Anchor rod and internal threaded anchor FIS E without perforated sleeve																
Effective anchorage depth	h_{ef}	[mm]	50	100	50	100	50	100	50	100	50	100	85		85	
							200		200		200					
Max. installation torque	max T_{inst}	[Nm]	3		5		15		15		25		3	5	15	
General installation parameters																
Edge distance	$c_{min} = c_{cr}$	[mm]	60													
Spacing	s_{min} ∥	[mm]	80													
	s_{cr} ∥	[mm]	80													
	s_{min} ⊥	[mm]	3x h_{ef}													
	s_{cr} ⊥	[mm]	3x h_{ef}													
Drilling method																
Hammer drilling with hard metal hammer drill																

[1)] The compressive strength of the single brick must not be less than 80% of the mean compressive strength.

Table C14.2: Group factors

Anchor rod			**M6**	**M8**	**M10**	**M12**	**M16**	**-**		**-**	
Internal threaded anchor FIS E			-	-	-	-	-	**M6**	**M8**	**M10**	**M12**
								11x85		**15x85**	
Group factor	$\alpha_{g,N}$ (s_{min} ∥)	[-]	0,7								
	$\alpha_{g,V}$ (s_{min} ∥)	[-]	1,3								
	$\alpha_{g,N}$ (s_{min} ⊥)	[-]	2,0								
	$\alpha_{g,V}$ (s_{min} ⊥)	[-]	2,0								

fischer injection system FIS V Plus for masonry

Performance
Solid calcium silicate brick KS, NF, dimensions, installation parameters

Annex C 14

Solid calcium silicate brick KS, NF, EN 771-2:2011+A1:2015

Table C15.1: Characteristic resistance to pull-out failure or brick breakout failure of a single anchor under tension loading

Anchor rod	**M6**	**M8**	**M10**	**M12**	**M16**	**-**	**-**
Internal threaded anchor FIS E	-	-	-	-	-	**M6 / M8**	**M10 / M12**
						11x85	**15x85**

Tension resistance $N_{Rk} = N_{Rk,p} = N_{Rk,b} = N_{Rk,p,c} = N_{Rk,b,c}$ [kN] depending on the mean compressive strength f_b; Installation and use condition w/w, w/d, d/d; (temperature range 50/80°C)[2)]

Mean compressive strength / Min. compressive strength single brick [1)]	Use conditions	Effective anchorage depth h_{ef} [mm]														
		50	100	50	100	50	100	200	50	100	200	50	100	200	85	85
15 / 12 N/mm²	w/w w/d	2,0	3,0	2,5	4,5	2,5	3,5	7,0	2,5	3,0	6,5	2,5	3,5	8,0	2,5	2,5
	d/d	4,0	5,5	4,0	8,0	4,0	5,5	12	4,0	4,5	12	4,5	5,5	12	4,0	4,0
25 / 20 N/mm²	w/w w/d	3,0	4,5	3,5	6,5	3,5	4,5	10	3,5	4,0	9,5	4,0	5,0	11	3,5	3,5
	d/d	5,5	7,5	6,0	11	6,0	8,0	12	6,0	6,5	12	6,5	8,0	12	6,0	6,0
35 / 28 N/mm²	w/w w/d	3,5	5,0	4,0	8,0	4,5	5,5	12	4,5	5,0	11	4,5	5,5	12	4,5	4,5
	d/d	6,5	9,0	7,0	12	7,0	9,0	12	7,0	7,5	12	7,5	9,5	12	7,0	7,0

1) The compressive strength of the single brick must not be less than 80% of the mean compressive strength.
2) For temperature range 72/120°C: $N_{Rk\,(72/120°C)} = 0{,}83 \cdot N_{Rk\,(50/80°C)}$.

Table C15.2: Characteristic resistance to local brick failure or brick edge failure of a single anchor under shear loading

Anchor rod	**M6**	**M8**	**M10**	**M12**	**M16**	**-**	**-**
Internal threaded anchor FIS E	-	-	-	-	-	**M6 / M8**	**M10 / M12**
						11x85	**15x85**

Shear resistance $V_{Rk} = V_{Rk,b} = V_{Rk,c,II} = V_{Rk,c,\perp}$ [kN] depending on the mean compressive strength f_b; Installation and use condition w/w, w/d, d/d; (temperature range 50/80°C and 72/120°C)

Mean compressive strength / Min. compressive strength single brick [1)]	Use conditions	Effective anchorage depth h_{ef} [mm]											
		50	100	50	100	50	≥100	50	≥100	50	≥100	85	85
15 / 12 N/mm²	w/w w/d d/d	1,5	3,0	1,5	3,0	1,2	2,0	1,2	2,0	1,2	2,0	1,2	1,2
25 / 20 N/mm²	w/w w/d d/d	2,5	4,0	2,5	4,0	1,5	3,0	1,5	3,0	1,5	3,0	1,5	1,5
35 / 28 N/mm²	w/w w/d d/d	3,0	4,5	3,0	4,5	1,5	3,5	1,5	3,5	1,5	3,5	1,5	1,5

1) The compressive strength of the single brick must not be less than 80% of the mean compressive strength.

Factor for job site tests and displacements see annex C 123.

Solid calcium silicate brick KS, 8DF, EN 771-2:2011+A1:2015

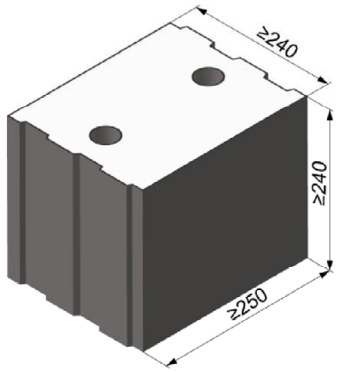

Producer		-		
Nominal dimensions	[mm]	length L	width W	height H
		≥ 250	≥ 240	≥ 240
Mean gross dry density ρ	[kg/dm³]	≥ 2,0		
Mean compressive strength / Min. compressive strength single brick [1]	[N/mm²]	12,5 / 10 or 25 / 20 or 35 / 28		
Standard or annex		EN 771-2:2011+A1:2015		

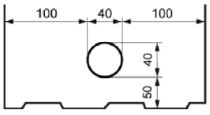

Dimension see also Annex B 15

Table C16.1: Installation parameters

Anchor rod			M6		M8		M10		M12		M16		-		-	
Internal threaded anchor FIS E			-		-		-		-		-		M6	M8	M10	M12
													11x85		15x85	
Anchor rod and internal threaded anchor FIS E without perforated sleeve																
Effective anchorage depth	h_{ef}	[mm]	50	100	50	100	50	100	50	100	50	100	85			
Max. installation torque	max T_{inst}	[Nm]	4		10								4	10		
Anchor rod and internal threaded anchor FIS E with perforated sleeve FIS H 16x85 K																
Effective anchorage depth	h_{ef}	[mm]	-[2]		85				-[2]				85		-[2]	
Max. installation torque	max T_{inst}	[Nm]			10								4	10		
General installation parameters																
Edge distance	$c_{min} = c_{cr}$	[mm]	60													
Spacing	s_{min} ∥	[mm]	80													
	s_{cr} ∥	[mm]	3x h_{ef}													
	s_{min} ⊥	[mm]	80													
	s_{cr} ⊥	[mm]	3x h_{ef}													
Drilling method																
Hammer drilling with hard metal hammer drill																

[1] The compressive strength of the single brick must not be less than 80% of the mean compressive strength

[2] No performance assessed

Table C16.2: Group factors

Anchor rods			M6	M8	M10	M12	M16	-		-	
Internal threaded anchor FIS E			-	-	-	-	-	M6	M8	M10	M12
								11x85		15x85	
Group factors	$\alpha_{g,N}$ (s_{min} ∥)	[-]	1,5								
	$\alpha_{g,V}$ (s_{min} ∥)	[-]	1,2								
	$\alpha_{g,N}$ (s_{min} ⊥)	[-]	1,5								
	$\alpha_{g,V}$ (s_{min} ⊥)	[-]	1,2								

fischer injection system FIS V Plus for masonry

Performance
Solid calcium silicate brick KS, 8DF, dimensions, installation parameters

Annex C 16

Solid calcium silicate brick KS, 8DF, EN 771-2:2011+A1:2015

Table C17.1: Characteristic resistance to pull-out failure or brick breakout failure of a single anchor under tension loading

Anchor rod	**M6**	**M8**	**M10**	**M12**	**M16**	**-**		**-**		**M8**	**M10**	**-**	
Internal threaded anchor FIS E	-	-	-	-	-	**M6**	**M8**	**M10**	**M12**	-	-	**M6**	**M8**
						11x85		**15x85**				**11x85**	
Perforated sleeve FIS H K	-	-	-	-	-	-		-		**16x85**			

Tension resistance $N_{Rk} = N_{Rk,p} = N_{Rk,b} = N_{Rk,p,c} = N_{Rk,b,c}$ [kN] depending on the mean compressive strength f_b; Installation and use condition w/w, w/d, d/d; (temperature range 50/80°C)[2)]

Mean compressive strength / Min. compressive strength single brick [1)]	Use conditions	Effective anchorage depth h_{ef} [mm]									
		≥ 50					85				
12,5 / 10 N/mm²	w/w w/d	3,0	4,0	4,5	4,5	3,5	3,0	3,5	4,5	3,0	4,5
	d/d	5,0	7,0	7,0	7,0	5,5	5,0	5,5	8,0	5,0	8,0
25 / 20 N/mm²	w/w w/d	4,5	6,0	6,0	6,0	5,0	4,5	5,0	6,5	4,5	6,5
	d/d	7,5	10,0	10,0	10,0	7,5	7,5	7,5	11,0	7,5	11
35 / 28 N/mm²	w/w w/d	5,0	8,0	8,5	8,5	7,0	5,0	7,0	8,5	5,0	8,5
	d/d	8,5	12,0	12,0	12,0	11,0	8,5	11,0	12,0	8,5	12

1) The compressive strength of the single brick must not be less than 80% of the mean compressive strength.
2) For temperature range 72/120°C: $N_{Rk\,(72/120°C)} = 0{,}83 \cdot N_{Rk\,(50/80°C)}$.

Table C17.2: Characteristic resistance to local brick failure or brick edge failure of a single anchor under shear loading

Anchor rod	**M6**	**M8**	**M10**	**M12**	**M16**	**-**		**-**		**M8**	**M10**	**-**	
Internal threaded anchor FIS E	-	-	-	-	-	**M6**	**M8**	**M10**	**M12**	-	-	**M6**	**M8**
						11x85		**15x85**				**11x85**	
Perforated sleeve FIS H K	-	-	-	-	-	-		-		**16x85**			

Shear resistance $V_{Rk} = V_{Rk,b} = V_{Rk,c,II} = V_{Rk,c,\perp}$ [kN] depending on the mean compressive strength f_b; Installation and use condition w/w, w/d, d/d; (temperature range 50/80°C and 72/120°C)

Mean compressive strength / Min. compressive strength single brick [1)]	Use conditions	Effective anchorage depth h_{ef} [mm]						
		≥ 50		85				
12,5 / 10 N/mm²	w/w w/d d/d	2,5	4,5	2,5	4,5	4,5	2,5	4,5
25 / 20 N/mm²	w/w w/d d/d	4,0	6,5	4,0	6,5	6,5	4,0	6,5
35 / 28 N/mm²	w/w w/d d/d	5,0	9,0	5,0	9,0	9,0	5,0	9,0

1) The compressive strength of the single brick must not be less than 80% of the mean compressive strength.

Factor for job site tests and displacements see annex C 123.

fischer injection system FIS V Plus for masonry

Performance
Solid calcium silicate brick KS, 8DF, Characteristic resistance under tension and shear loading

Annex C 17

Solid calcium silicate brick KS, EN 771-2:2011+A1:2015

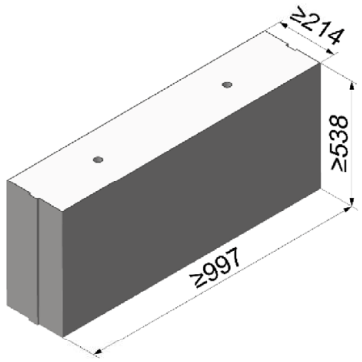

Producer		e.g. Calduran		
Nominal dimensions	[mm]	length L	width W	height H
		≥ 997	≥ 214	≥ 538
Mean gross dry density ρ	[kg/dm³]	1,8	2,2	
Mean compressive strength / Min. compressive strength single brick [1)]	[N/mm²]	12,5 / 10 or 25 / 20	45 / 36	
Standard or annex		EN 771-2:2011+A1:2015		

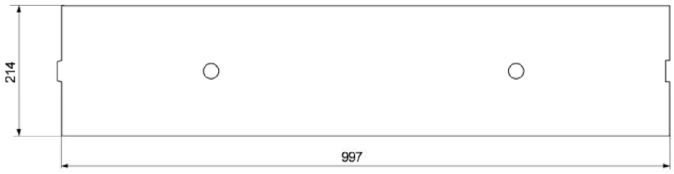

Table C18.1: Installation parameters

Anchor rod			M6		M8		M10		M12		M16		-		-	
Internal threaded anchor FIS E			-		-		-		-		-		M6	M8	M10	M12
													11x85		15x85	
Anchor rod and internal threaded anchor FIS E without perforated sleeve																
Effective anchorage depth	h_{ef}	[mm]	50	100	50	100	50	100	50	100	50	100	85			
Max. installation torque	max T_{inst}	[Nm]	4		10								4	10		
General installation parameters																
Edge distance	$c_{min} = c_{cr}$	[mm]	75													
Spacing	s_{cr} ∥ = s_{min} ∥	[mm]	3x h_{ef}													
	s_{cr} ⊥ = s_{min} ⊥	[mm]	3x h_{ef}													
Drilling method																
Hammer drilling with hard metal hammer drill																

[1)] The compressive strength of the single brick must not be less than 80% of the mean compressive strength.

Table C18.2: Group factors

Anchor rod			M6	M8	M10	M12	M16	-		-	
Internal threaded anchor FIS E			-	-	-	-	-	M6	M8	M10	M12
								11x85		15x85	
Group factors	$\alpha_{g,N}$ (s_{min} ∥)	[-]	2								
	$\alpha_{g,V}$ (s_{min} ∥)	[-]	2								
	$\alpha_{g,N}$ (s_{min} ⊥)	[-]	2								
	$\alpha_{g,V}$ (s_{min} ⊥)	[-]	2								

fischer injection system FIS V Plus for masonry

Performance
Solid calcium silicate brick KS, dimensions, installation parameters

Annex C 18

Solid calcium silicate brick KS, EN 771-2:2011+A1:2015

Table C19.1: Characteristic resistance to pull-out failure or brick breakout failure of a single anchor under tension loading

Anchor rod	**M6**	**M8**	**M10**	**M12**	**M16**	**-**		**-**	
Internal threaded anchor FIS E	**-**	**-**	**-**	**-**	**-**	**M6**	**M8**	**M10**	**M12**
						11x85		**15x85**	

Tension resistance $N_{Rk} = N_{Rk,p} = N_{Rk,b} = N_{Rk,p,c} = N_{Rk,b,c}$ [kN] depending on the mean compressive strength f_b; Installation and use condition w/w, w/d, d/d; (temperature range 50/80°C)[2)]

Mean compressive strength / Min. compressive strength single brick [1)]	Use conditions	Effective anchorage depth h_{ef} [mm]										
		50	100	50	100	50	100	50	100	50	100	85
12,5 / 10 N/mm²	w/w w/d	4,0		4,0	7,0	5,0	6,0	5,0	6,0	5,5	7,5	5,5
	d/d	7,0		7,0	12,0	8,0	9,5	8,0	10,0	9,0	11,5	9,0
25 / 20 N/mm²	w/w w/d	5,5		6,0	10,0	7,0	8,5	7,0	9,0	8,0	11,0	8,0
	d/d	8,5		10,5	12,0	11,5	12,0	11,0	12,0	12,0	12,0	12,0
45 / 36 N/mm²	w/w w/d	4,5		8,0	12,0	11,5	12,0	12,0	12,0	12,0	12,0	12,0
	d/d	8,0		12,0	12,0	12,0	12,0	12,0	12,0	12,0	12,0	12,0

1) The compressive strength of the single brick must not be less than 80% of the mean compressive strength.
2) For temperature range 72/120°C: $N_{Rk\,(72/120°C)} = 0{,}83 \cdot N_{Rk\,(50/80°C)}$.

Table C19.2: Characteristic resistance to local brick failure or brick edge failure of a single anchor under shear loading

Anchor rod	**M6**	**M8**	**M10**	**M12**	**M16**	**-**		**-**	
Internal threaded anchor FIS E	**-**	**-**	**-**	**-**	**-**	**M6**	**M8**	**M10**	**M12**
						11x85		**15x85**	

Shear resistance $V_{Rk} = V_{Rk,b} = V_{Rk,c,II} = V_{Rk,c,\perp}$ [kN] depending on the mean compressive strength f_b; Installation and use condition w/w, w/d, d/d; (temperature range 50/80°C and 72/120°C)

Mean compressive strength / Min. compressive strength single brick [1)]	Use conditions	Effective anchorage depth h_{ef} [mm]								
		≥ 50					85			
12,5 / 10 N/mm²	w/w w/d d/d	3,0	5,0	5,5	4,0	4,0	3,0	5,0	5,5	4,0
25 / 20 N/mm²	w/w w/d d/d	4,5	7,0	7,5	6,0	6,0	4,5	7,0	7,5	6,0
45 / 36 N/mm²	w/w w/d d/d	4,5	9,0	11,0	12,0	12,0	4,5	9,0	11,0	12,0

1) The compressive strength of the single brick must not be less than 80% of the mean compressive strength.

Factor for job site tests and displacements see annex C 123.

Solid calcium silicate brick KS, EN 771-2:2011+A1:2015

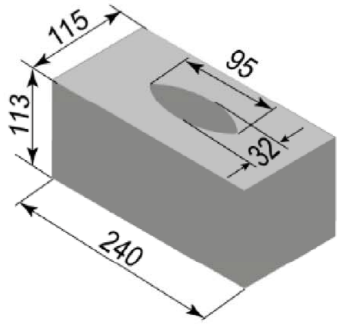

Producer		-		
Nominal dimensions	[mm]	length L	width W	height H
		≥ 240	≥ 115	≥ 113
Mean gross dry density ρ	[kg/dm³]	1,8		
Mean compressive strength / Min. compressive strength single brick [1)]	[N/mm²]	12,5 / 10 or 25 / 20		
Standard or annex		EN 771-2:2011+A1:2015		

Table C20.1: Installation parameters
(Pre-positioned anchorage with perforated sleeve FIS H K)

Anchor rod		**M6**	**M8**	**-**		**M8**	**M10**	**M8**	**M10**	**-**		**M12**	**M16**	**M12**	**M16**
Internal threaded anchor FIS E		**-**		**M6**	**M8**	**-**		**-**		**M10**	**M12**	**-**		**-**	
				11x85						**15x85**					
Perforated sleeve FIS H K		**12x85**		**16x85**				**16x130**		**20x85**				**20x130**	
Anchor rod and internal threaded anchor FIS E with perforated sleeve FIS H K															
Max. installation torque	max T_{inst} [Nm]	2		4											
General installation parameters															
Edge distance	$c_{min} = c_{cr}$ [mm]	100													
Spacing	s_{min} ∥ / s_{cr} ∥ / s_{min} ⊥ / s_{cr} ⊥ [mm]	255		255				390		255				390	
Drilling method															
Hammer drilling with hard metal hammer drill															

[1)] The compressive strength of the single brick must not be less than 80% of the mean compressive strength.

Table C20.2: Group factors

Anchor rod		**M6**	**M8**	**M8**	**M10**	**M8**	**M10**	**M12**	**M16**	**M12**	**M16**
Perforated sleeve FIS H K		**12x85**		**16x85**		**16x130**		**20x85**		**20x130**	
Group factors	$\alpha_{g,N}$ (s_{min} ∥) = $\alpha_{g,V}$ (s_{min} ∥) / $\alpha_{g,N}$ (s_{min} ⊥) = $\alpha_{g,V}$ (s_{min} ⊥) [-]	2									

fischer injection system FIS V Plus for masonry

Performance
Solid calcium silicate brick KS, dimensions, installation parameters

Annex C 20

Solid calcium silicate brick KS, EN 771-2:2011+A1:2015

Table C21.1: Installation parameters
(Push through anchorage with perforated sleeve FIS H K)

Anchor rod			**M10**	**M12**	**M16**
Perforated sleeve FIS H K			**18x130/200**		**22x130/200**
Anchor rod with perforated sleeve FIS H K					
Max. installation torque	max T_{inst}	[Nm]	4		
General installation parameters					
Edge distance	$c_{min} = c_{cr}$	[mm]	100		
Spacing	s_{min} II		390		
	s_{cr} II		390		
	s_{min} ⊥		390		
	s_{cr} ⊥		390		
Drilling method					
Hammer drilling with hard metal hammer drill					

Table C21.2: Group factors

Anchor rod			**M10**	**M12**	**M16**
Perforated sleeve FIS H K			**18x130/200**		**22x130/200**
Group factors	$\alpha_{g,N}$ (s_{min} II)	[-]	2		
	$\alpha_{g,V}$ (s_{min} II)				
	$\alpha_{g,N}$ (s_{min} ⊥)				
	$\alpha_{g,V}$ (s_{min} ⊥)				

fischer injection system FIS V Plus for masonry

Performance
Solid calcium silicate brick KS, dimensions, installation parameters

Annex C 21

Solid calcium silicate brick, EN 771-2:2011+A1:2015

Table C22.1: Characteristic resistance to pull-out failure or brick breakout failure of a single anchor under tension loading (Pre-positioned anchorage)

Anchor rod	**M6**	**M8**	**-**	**M8**	**M10**	**M8**	**M10**	**-**	**M12**	**M16**	**M12**	**M16**
Internal threaded anchor FIS E	**-**		**M6** / **11x85**	**M8**	**-**	**-**		**M10** / **15x85**	**M12**	**-**	**-**	
Perforated sleeve FIS H K	**12x85**		**16x85**			**16x130**		**20x85**			**20x130**	
Tension resistance $N_{Rk} = N_{Rk,p} = N_{Rk,b} = N_{Rk,p,c} = N_{Rk,b,c}$ [kN] depending on the mean compressive strength f_b; Installation and use condition w/w, d/d; (temperature range 50/80°C)[2)]												
Mean compressive strength / Min. compressive strength single brick [1)]	Use conditions											
12,5 / 10 N/mm²	w/w	3,5	2,0	2,0	2,0	6,5					4,5	
	d/d	6,0	4,0	3,5	3,5	10,5					7,0	
25 / 20 N/mm²	w/w	5,0	3,0	3,0	3,0	9,5					6,0	
	d/d	8,5	5,5	5,5	5,5	12,0					10,0	

1) The compressive strength of the single brick must not be less than 80% of the mean compressive strength.
2) For temperature range 72/120°C no performance assessed.

Table C22.2: Characteristic resistance to pull-out failure or brick breakout failure of a single anchor under tension loading (Push through anchorage)

Anchor rod	**M10**	**M12**	**M16**
Perforated sleeve FIS H K	**18x130/200**		**22x130/200**
Tension resistance $N_{Rk} = N_{Rk,p} = N_{Rk,b} = N_{Rk,p,c} = N_{Rk,b,c}$ [kN] depending on the mean compressive strength f_b; Installation and use condition w/w, d/d; (temperature range 50/80°C)[2)]			
Mean compressive strength / Min. compressive strength single brick [1)]	Use conditions		
12,5 / 10 N/mm²	w/w	2,0	4,5
	d/d	3,5	7,0
25 / 20 N/mm²	w/w	3,0	6,0
	d/d	5,5	10,0

1) The compressive strength of the single brick must not be less than 80% of the mean compressive strength.
2) For temperature range 72/120°C no performance assessed.

Factor for job site tests and displacements see annex C 123.

Table C23.1: Characteristic resistance to local brick failure or brick edge failure of a single anchor under shear loading (Pre-positioned anchorage)

Anchor rod	**M6**	**M8**	**-**		**M8**	**M10**	**M8**	**M10**	**-**		**M12**	**M16**	**M12**	**M16**
Internal threaded anchor FIS E	**-**		**M6**	**M8**	**-**		**-**		**M10**	**M12**	**-**		**-**	
			11x85						**15x85**					
Perforated sleeve FIS H K	**12x85**		**16x85**				**16x130**		**20x85**				**20x130**	

Shear resistance $V_{Rk} = V_{Rk,b} = V_{Rk,c,II} = V_{Rk,c,\perp}$ [kN] depending on the mean compressive strength f_b; Installation and use condition w/w, d/d; (temperature range 50/80°C)[2)]			
Mean compressive strength / Min. compressive strength single brick [1)]	Use conditions		
12,5 / 10 N/mm²	w/w	3,0	3,5
	d/d		
25 / 20 N/mm²	w/w	4,0	5,5
	d/d		

1) The compressive strength of the single brick must not be less than 80% of the mean compressive strength.
2) For temperature range 72/120°C no performance assessed.

Table C23.2: Characteristic resistance to local brick failure or brick edge failure of a single anchor under shear loading (Push through anchorage)

Anchor rod	**M10**	**M12**	**M16**
Perforated sleeve FIS H K	**18x130/200**		**22x130/200**

Shear resistance $V_{Rk} = V_{Rk,b} = V_{Rk,c,II} = V_{Rk,c,\perp}$ [kN] depending on the mean compressive strength f_b; Installation and use condition w/w, d/d; (temperature range 50/80°C)[2)]		
Mean compressive strength / Min. compressive strength single brick [1)]	Use conditions	
12,5 / 10 N/mm²	w/w	3,5
	d/d	
25 / 20 N/mm²	w/w	5,5
	d/d	

1) The compressive strength of the single brick must not be less than 80% of the mean compressive strength.
2) For temperature range 72/120°C no performance assessed.

Factor for job site tests and displacements see annex C 123.

fischer injection system FIS V Plus for masonry

Performance
Solid calcium silicate brick KS, Characteristic resistance under shear loading

Annex C 23

Perforated calcium silicate brick KSL, 3DF, EN 771-2:2011+A1:2015

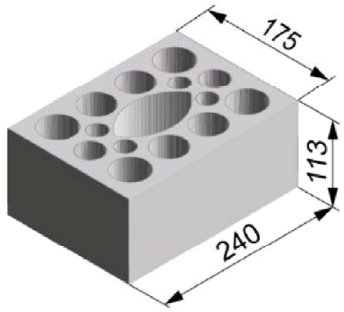

Producer		-		
Nominal dimensions	[mm]	length L	width W	height H
		240	175	113
Mean gross dry density ρ	[kg/dm³]	≥ 1,4		
Mean compressive strength / Min. compressive strength single brick [1)]	[N/mm²]	10 / 8 or 12,5 / 10 or 15 / 12 or 20 / 16 or 25 / 20		
Standard or annex		EN 771-2:2011+A1:2015		

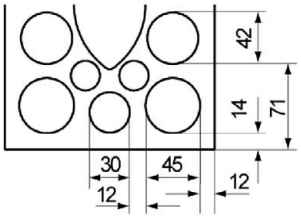

Dimension see also Annex B 15

Table C24.1: Installation parameters
(Pre-positioned anchorage with perforated sleeve FIS H K)

Anchor rod	**M6**	**M8**	**M6**	**M8**	**-**	**M8**	**M10**	**M8**	**M10**	**-**	**M12**	**M16**	**M12**	**M16**
Internal threaded anchor FIS E	-		-		**M6 M8** / **11x85**	-		-		**M10 M12** / **15x85**	-		-	
Perforated sleeve FIS H K	**12x50**		**12x85**		**16x85**			**16x130**		**20x85**			**20x130**	

Anchor rod and internal threaded anchor FIS E with perforated sleeve FIS H K			
Max. installation torque	max T_{inst}	[Nm]	2
General installation parameters			
Edge distance	$c_{min} = c_{cr}$	[mm]	60 / 80
Spacing	s_{min} ∥	[mm]	100
	s_{cr} ∥	[mm]	240
	s_{min} ⊥	[mm]	115
	s_{cr} ⊥	[mm]	115
Drilling method			
Hammer drilling with hard metal hammer drill			

[1)] The compressive strength of the single brick must not be less than 80% of the mean compressive strength.

Table C24.2: Group factors

Anchor rod	**M6**	**M8**	**M6**	**M8**	**-**	**M8**	**M10**	**M8**	**M10**	**-**	**M12**	**M16**	**M12**	**M16**
Internal threaded anchor FIS E	-		-		**M6 M8** / **11x85**	-		-		**M10 M12** / **15x85**	-		-	
Perforated sleeve FIS H K	**12x50**		**12x85**		**16x85**			**16x130**		**20x85**			**20x130**	

Group factors	$\alpha_{g,N}$ (s_{min} ∥) = $\alpha_{g,V}$ (s_{min} ∥)	[-]	1,5
	$\alpha_{g,N}$ (s_{min} ⊥) = $\alpha_{g,V}$ (s_{min} ⊥)	[-]	2,0

fischer injection system FIS V Plus for masonry

Performance
Perforated calcium silicate brick KSL, 3DF, dimensions, installation parameters

Annex C 24

Perforated calcium silicate brick KSL, 3DF, EN 771-2:2011+A1:2015

Table C25.1: Installation parameters
(Push through anchorage with perforated sleeve FIS H K)

Anchor rod			**M10**	**M12**	**M16**
Perforated sleeve FIS H K			**18x130/200**		**22x130/200**
Anchor rod with perforated sleeve FIS H K					
Max. installation torque	max T_{inst}	[Nm]	2		
General installation parameters					
Edge distance	$c_{min} = c_{cr}$	[mm]	80		
Spacing	s_{min} II		100		
	s_{cr} II		240		
	s_{min} ⊥		115		
	s_{cr} ⊥		115		
Drilling method					
Hammer drilling with hard metal hammer drill					

Table C25.2: Group factors

Anchor rod			**M10**	**M12**	**M16**
Perforated sleeve FIS H K			**18x130/200**		**22x130/200**
Group factors	$\alpha_{g,N}$ (s_{min} II)	[-]	1,5		
	$\alpha_{g,V}$ (s_{min} II)				
	$\alpha_{g,N}$ (s_{min} ⊥)		2,0		
	$\alpha_{g,V}$ (s_{min} ⊥)				

fischer injection system FIS V Plus for masonry

Performance
Perforated calcium silicate brick KSL, 3DF, dimensions, installation parameters

Annex C 25

Perforated calcium silicate brick KSL, 3DF, EN 771-2:2011+A1:2015

Table C26.1: Characteristic resistance to pull-out failure or brick breakout failure of a single anchor under tension loading (Pre-positioned anchorage)

Anchor rod	**M6**	**M8**	**M6**	**M8**	**-**	**M8**	**M10**	**M8**	**M10**	**-**	**M12**	**M16**	**M12**	**M16**
Internal threaded anchor FIS E	**-**		**-**		**M6** / **11x85**	**M8**	**-**	**-**		**M10** / **15x85**	**M12**	**-**	**-**	
Perforated sleeve FIS H K	**12x50**		**12x85**		**16x85**			**16x130**		**20x85**			**20x130**	

Tension resistance $N_{Rk} = N_{Rk,p} = N_{Rk,b} = N_{Rk,p,c} = N_{Rk,b,c}$ [kN] depending on the mean compressive strength f_b; Installation and use condition w/w, w/d, d/d; (temperature range 50/80°C) [2]

Mean compressive strength / Min. compressive strength single brick [1]	Use conditions													
10 / 8 N/mm²	w/w	w/d	1,5		2,0			2,0		2,0			2,0	
	d/d		1,5		2,0			2,5		2,5			2,5	
12,5 / 10 N/mm²	w/w	w/d	2,0		2,0			2,5		2,5			2,5	
	d/d		2,0		2,5			3,0		3,0			3,0	
15 / 12 N/mm²	w/w	w/d	2,5		2,5			3,0		3,0			3,0	
	d/d		2,5		3,0			3,5		3,5			3,5	
20 / 16 N/mm²	w/w	w/d	3,0		3,5			4,5		4,5			4,5	
	d/d		3,5		4,0			4,5		4,5			4,5	
25 / 20 N/mm²	w/w	w/d	4,0		4,5			5,5		5,5			5,5	
	d/d		4,5		5,0			6,0		6,0			6,0	

[1] The compressive strength of the single brick must not be less than 80% of the mean compressive strength.
[2] For temperature range 72/120°C: $N_{Rk\,(72/120°C)} = 0{,}83 \cdot N_{Rk\,(50/80°C)}$.

Table C26.2: Characteristic resistance to pull-out failure or brick breakout failure of a single anchor under tension loading (Push through anchorage)

Anchor rod	**M10**	**M12**	**M16**
Perforated sleeve FIS H K	**18x130/200**		**22x130/200**

Tension resistance $N_{Rk} = N_{Rk,p} = N_{Rk,b} = N_{Rk,p,c} = N_{Rk,b,c}$ [kN] depending on the mean compressive strength f_b; Installation and use condition w/w, w/d, d/d; (temperature range 50/80°C) [2]

Mean compressive strength / Min. compressive strength single brick [1]	Use conditions		
10 / 8 N/mm²	w/w	w/d	2,0
	d/d		2,5
12,5 / 10 N/mm²	w/w	w/d	2,5
	d/d		3,0
15 / 12 N/mm²	w/w	w/d	3,0
	d/d		3,5
20 / 16 N/mm²	w/w	w/d	4,5
	d/d		4,5
25 / 20 N/mm²	w/w	w/d	5,5
	d/d		6,0

[1] The compressive strength of the single brick must not be less than 80% of the mean compressive strength.
[2] For temperature range 72/120°C: $N_{Rk\,(72/120°C)} = 0{,}83 \cdot N_{Rk\,(50/80°C)}$.
Factor for job site tests and displacements see annex C 123.

fischer injection system FIS V Plus for masonry

Performance
Perforated calcium silicate brick KSL, 3DF, Characteristic resistance under tension loading

Annex C 26

Perforated calcium silicate brick KSL, 3DF, EN 771-2:2011+A1:2015

Table C27.1: Characteristic resistance to local brick failure or brick edge failure of a single anchor under shear loading (Pre-positioned anchorage)

Anchor rod		**M6**	**M8**	**M6**	**M8**	**-**	**M8**	**M10**	**M8**	**M10**	**-**	**M12**	**M16**	**M12**	**M16**
Internal threaded anchor FIS E		**-**		**-**		**M6 M8** / **11x85**	**-**		**-**		**M10 M12** / **15x85**	**-**		**-**	
Perforated sleeve FIS H K		**12x50**		**12x85**		**16x85**			**16x130**		**20x85**			**20x130**	
Shear resistance $V_{Rk} = V_{Rk,b} = V_{Rk,c,II} = V_{Rk,c,\perp}$ [kN] depending on the mean compressive strength f_b; Installation and use condition w/w, w/d, d/d; (temperature range 50/80°C and 72/120°C)															
Mean compressive strength / Min. compressive strength single brick [1]	Use conditions														
10 / 8 N/mm²	w/w w/d d/d	1,5					3,0						2,5	3,0	2,5
12,5 / 10 N/mm²	w/w w/d d/d	2,0					3,5								
15 / 12 N/mm²	w/w w/d d/d	2,5					4,5						4,0	4,5	4,0
20 / 16 N/mm²	w/w w/d d/d	3,0	3,5	3,0	3,5	3,0	6,0						5,5	6,0	5,5
25 / 20 N/mm²	w/w w/d d/d	4,0	4,5	4,0	4,5	4,0	7,5						6,5	7,5	6,5

[1] The compressive strength of the single brick must not be less than 80% of the mean compressive strength.

Table C27.2: Characteristic resistance to local brick failure or brick edge failure of a single anchor under shear loading (Push through anchorage)

Anchor rod	**M10**	**M12**	**M16**
Perforated sleeve FIS H K	**18x130/200**		**22x130/200**
Shear resistance $V_{Rk} = V_{Rk,b} = V_{Rk,c,II} = V_{Rk,c,\perp}$ [kN] depending on the mean compressive strength f_b; Installation and use condition w/w, w/d, d/d; (temperature range 50/80°C and 72/120°C)			
Mean compressive strength / Min. compressive strength single brick [1] / Use conditions			
10 / 8 N/mm² (w/w w/d d/d)	3,0		2,5
12,5 / 10 N/mm² (w/w w/d d/d)	3,5		3,5
15 / 12 N/mm² (w/w w/d d/d)	4,5		4,0
20 / 16 N/mm² (w/w w/d d/d)	6,0		5,5
25 / 20 N/mm² (w/w w/d d/d)	7,5		6,5

[1] The compressive strength of the single brick must not be less than 80% of the mean compressive strength.

Factor for job site tests and displacements see annex C 123.

fischer injection system FIS V Plus for masonry	**Annex C 27**
Performance Perforated calcium silicate brick KSL, 3DF, Characteristic resistance under shear loading	

Vertical perforated brick HLz, EN 771-1:2011+A1:2015

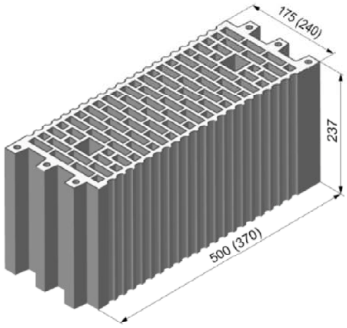

Producer		e.g. Wienerberger, Poroton		
Nominal dimensions	[mm]	length L	width W	height H
		500	175	237
		370	240	237
Mean gross dry density ρ	[kg/dm³]	≥ 1,0		
Mean compressive strength / Min. compressive strength single brick [1]	[N/mm²]	5 / 4 or 7,5 / 6 or 10 / 8 or 12,5 / 10 or 15 / 12		
Standard or annex		EN 771-1:2011+A1:2015		

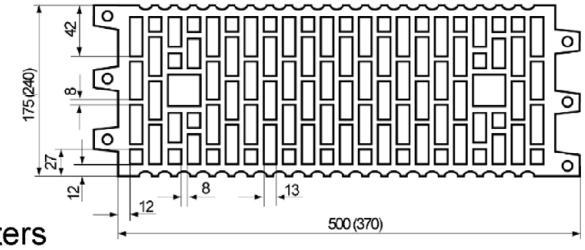

Dimension see also Annex B 15

Table C28.1: Installation parameters

Anchor rod	M6	M8	M6	M8	-	M8	M10	M8	M10	-	M12	M16	M12	M16
Internal threaded anchor FIS E	-		-		M6 M8 / 11x85	-		-		M10 M12 / 15x85	-		-	
Perforated sleeve FIS H K	12x50		12x85		16x85			16x130		20x85			20x130	
Anchor rod and internal threaded anchor FIS E with perforated sleeve FIS H K														
Max. installation torque max T_{inst} [Nm]	2													
General installation parameters														
Edge distance $c_{min} = c_{cr}$ [mm]	100													
Spacing s_{min} ∥ [mm]	100													
Spacing s_{cr} ∥ [mm]	500 (370)													
Spacing s_{min} ⊥ [mm]	100													
Spacing s_{cr} ⊥ [mm]	240													
Drilling method														
Hammer drilling with hard metal hammer drill														

[1] The compressive strength of the single brick must not be less than 80% of the mean compressive strength.

Table C28.2: Group factors

Anchor rod	M6	M8	M6	M8	-	M8	M10	M8	M10	-	M12	M16	M12	M16
Internal threaded anchor FIS E	-		-		M6 M8 / 11x85	-		-		M10 M12 / 15x85	-		-	
Perforated sleeve FIS H K	12x50		12x85		16x85			16x130		20x85			20x130	
Group factors $\frac{\alpha_{g,N}(s_{min} \parallel) = \alpha_{g,V}(s_{min} \parallel)}{\alpha_{g,N}(s_{min} \perp) = \alpha_{g,V}(s_{min} \perp)}$ [-]	1													

fischer injection system FIS V Plus for masonry

Performance
Vertical perforated brick HLz, dimensions, installation parameters

Annex C 28

Vertical perforated brick HLz, EN 771-1:2011+A1:2015

Table C29.1: Characteristic resistance to pull-out failure or brick breakout failure of a single anchor under tension loading

Anchor rod	**M6**	**M8**	**M6**	**M8**	**-**		**M8**	**M10**	**M8**	**M10**	**-**		**M12**	**M16**	**M12**	**M16**
Internal threaded anchor FIS E	**-**		**-**		**M6**	**M8**	**-**		**-**		**M10**	**M12**	**-**		**-**	
					11x85						**15x85**					
Perforated sleeve FIS H K	**12x50**		**12x85**		**16x85**				**16x130**		**20x85**				**20x130**	

Tension resistance $N_{Rk} = N_{Rk,p} = N_{Rk,b} = N_{Rk,p,c} = N_{Rk,b,c}$ [kN] depending on the mean compressive strength f_b; Installation and use condition w/w, w/d, d/d; (temperature range 50/80°C) [2]

Mean compressive strength / Min. compressive strength single brick [1]	Use conditions															
5 / 4 N/mm²	w/w	w/d	0,30				0,90								1,20	
	d/d		0,40				0,90								1,20	
7,5 / 6 N/mm²	w/w	w/d	0,50				1,50								2,00	
	d/d		0,60				1,50								2,00	
10 / 8 N/mm²	w/w	w/d	0,75				2,00								2,50	
	d/d		0,75				2,00								2,50	
12,5 / 10 N/mm²	w/w	w/d	0,90				2,50								3,00	
	d/d		0,90				2,50								3,50	
15 / 12 N/mm²	w/w	w/d	0,90				3,00								3,50	
	d/d		1,20				3,00								4,00	

[1] The compressive strength of the single brick must not be less than 80% of the mean compressive strength.
[2] For temperature range 72/120°C: $N_{Rk\,(72/120°C)} = 0{,}83 \cdot N_{Rk\,(50/80°C)}$.

Table C29.2: Characteristic resistance to local brick failure or brick edge failure of a single anchor under shear loading

Anchor rod	**M6**	**M8**	**M6**	**M8**	**-**		**M8**	**M10**	**M8**	**M10**	**-**		**M12**	**M16**	**M12**	**M16**
Internal threaded anchor FIS E	**-**		**-**		**M6**	**M8**	**-**		**-**		**M10**	**M12**	**-**		**-**	
					11x85						**15x85**					
Perforated sleeve FIS H K	**12x50**		**12x85**		**16x85**				**16x130**		**20x85**				**20x130**	

Shear resistance $V_{Rk} = V_{Rk,b} = V_{Rk,c,II} = V_{Rk,c,\perp}$ [kN] depending on the mean compressive strength f_b; Installation and use condition w/w, w/d, d/d; (temperature range 50/80°C and 72/120°C)

Mean compressive strength / Min. compressive strength single brick [1]	Use conditions															
5 / 4 N/mm²	w/w w/d d/d		0,50						0,60		0,50				0,60	
7,5 / 6 N/mm²			0,75						0,90		0,75				0,90	
10 / 8 N/mm²			0,90						1,20		0,90				1,20	
12,5 / 10 N/mm²			1,20						1,50		1,20				1,50	
15 / 12 N/mm²			1,50						2,00		1,50				2,00	

[1] The compressive strength of the single brick must not be less than 80% of the mean compressive strength.

Factor for job site tests and displacements see annex C 123.

fischer injection system FIS V Plus for masonry	**Annex C 29**
Performance Vertical perforated brick HLz, Characteristic resistance under tension and shear loading	

Vertical perforated brick HLz, 2DF, EN 771-1:2011+A1:2015

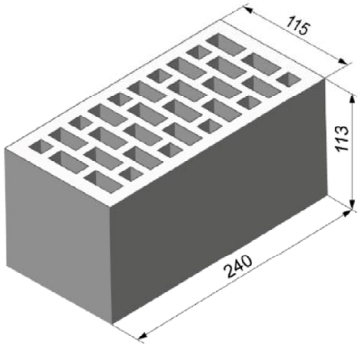

Producer		e.g. Wienerberger		
Nominal dimensions	[mm]	length L	width W	height H
		240	115	113
Mean gross dry density ρ	[kg/dm³]	≥ 1,4		
Mean compressive strength / Min. compressive strength single brick [1)]	[N/mm²]	7,5 / 6 or 12,5 / 10 or 20 / 16 or 25 / 20 or 35 / 28		
Standard or annex		EN 771-1:2011+A1:2015		

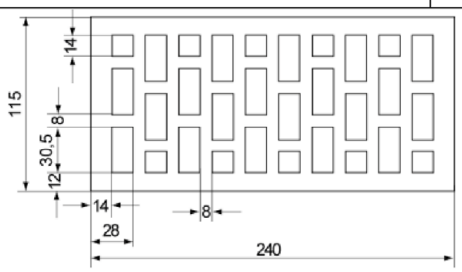

Dimension see also Annex B 15

Table C30.1: Installation parameters

Anchor rod	M6	M8	M6	M8	-		M8	M10	-		M12	M16
Internal threaded anchor FIS E	-		-		M6	M8	-		M10	M12	-	
					11x85				15x85			
Perforated sleeve FIS H K	12x50		12x85		16x85				20x85			

Anchor rod and internal threaded anchor FIS E with perforated sleeve FIS H K			
Max. installation torque	max T_{inst}	[Nm]	2
General installation parameters			
Edge distance	$c_{min} = c_{cr}$	[mm]	80
Spacing	s_{cr} ∥ = s_{min} ∥	[mm]	240
	s_{cr} ⊥ = s_{min} ⊥	[mm]	115
Drilling method			
Hammer drilling with hard metal hammer drill			

[1)] The compressive strength of the single brick must not be less than 80% of the mean compressive strength.

Table C30.2: Group factors

Anchor rod	M6	M8	M6	M8	-		M8	M10	-		M12	M16
Internal threaded anchor FIS E	-		-		M6	M8	-		M10	M12	-	
					11x85				15x85			
Perforated sleeve FIS H K	12x50		12x85		16x85				20x85			

Group factors	$\alpha_{g,N}$ (s_{min} ∥)	[-]	2
	$\alpha_{g,V}$ (s_{min} ∥)		
	$\alpha_{g,N}$ (s_{min} ⊥)		
	$\alpha_{g,V}$ (s_{min} ⊥)		

fischer injection system FIS V Plus for masonry

Performance
Vertical perforated brick HLz, 2DF, dimensions, installation parameters

Annex C 30

Vertical perforated brick HLz, 2DF, EN 771-1:2011+A1:2015

Table C31.1: Characteristic resistance to pull-out failure or brick breakout failure of a single anchor under tension loading

Anchor rod	**M6**	**M8**	**M6**	**M8**	**-**	**M8**	**M10**	**-**	**M12**	**M16**
Internal threaded anchor FIS E	**-**		**-**		**M6 M8**	**-**		**M10 M12**	**-**	
					11x85			**15x85**		
Perforated sleeve FIS H K	**12x50**		**12x85**		**16x85**			**20x85**		

Tension resistance $N_{Rk} = N_{Rk,p} = N_{Rk,b} = N_{Rk,p,c} = N_{Rk,b,c}$ [kN] depending on the mean compressive strength f_b; Installation and use condition w/w, w/d, d/d; (temperature range 50/80°C) [2]

Mean compressive strength / Min. compressive strength single brick [1]	Use con-ditions					
7,5 / 6 N/mm²	w/w w/d	0,75	0,90	0,75	0,90
	d/d	0,75	1,20	0,75	0,90
12,5 / 10 N/mm²	w/w w/d	1,20	1,50	1,20	1,50
	d/d	1,20	2,00	1,20	1,50
20 / 16 N/mm²	w/w w/d	2,00	2,50	2,00	2,00
	d/d	2,00	3,00	2,00	2,50
25 / 20 N/mm²	w/w w/d	2,50	3,50	2,50	3,00
	d/d	2,50	4,00	2,50	3,00
35 / 28 N/mm²	w/w w/d	3,00	5,00	3,50	4,00
	d/d	3,50	5,50	3,50	4,50

[1] The compressive strength of the single brick must not be less than 80% of the mean compressive strength.
[2] For temperature range 72/120°C: $N_{Rk\,(72/120°C)} = 0{,}83 \cdot N_{Rk\,(50/80°C)}$.

Table C31.2: Characteristic resistance to local brick failure or brick edge failure of a single anchor under shear loading

Anchor rod	**M6**	**M8**	**M6**	**M8**	**-**	**M8**	**M10**	**-**	**M12**	**M16**
Internal threaded anchor FIS E	**-**		**-**		**M6 M8**	**-**		**M10 M12**	**-**	
					11x85			**15x85**		
Perforated sleeve FIS H K	**12x50**		**12x85**		**16x85**			**20x85**		

Shear resistance $V_{Rk} = V_{Rk,b} = V_{Rk,c,II} = V_{Rk,c,\perp}$ [kN] depending on the mean compressive strength f_b; Installation and use condition w/w, w/d, d/d; (temperature range 50/80°C and 72/120°C)

Mean compressive strength / Min. compressive strength single brick [1]	Use con-ditions							
7,5 / 6 N/mm²	w/w w/d d/d	1,2	1,5	1,2	2,0	1,2	1,5	2,5
12,5 / 10 N/mm²		2,0	2,5	2,0	4,0	2,0	2,5	4,5
20 / 16 N/mm²		3,0	3,5	3,0	6,0	3,0	3,5	7,0
25 / 20 N/mm²		4,0	4,5	4,0	7,5	4,0	4,5	8,5
35 / 28 N/mm²		5,0	6,5	5,0	9,5	5,0	6,5	12,0

[1] The compressive strength of the single brick must not be less than 80% of the mean compressive strength.

Factor for job site tests and displacements see annex C 123.

fischer injection system FIS V Plus for masonry

Performance
Vertical perforated brick HLz, 2DF,
Characteristic resistance under tension and shear loading

Annex C 31

Vertical perforated brick HLz, U8, EN 771-1:2011+A1:2015

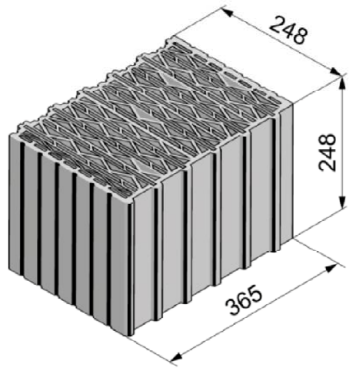

Producer		e.g. Wienerberger		
Nominal dimensions	[mm]	length L	width W	height H
		248	365	248
Mean gross dry density ρ	[kg/dm³]	0,6		
Mean compressive strength / Min. compressive strength single brick [1)]	[N/mm²]	5 / 4 or 7,5 / 6 or 10 / 8		
Standard or annex		EN 771-1:2011+A1:2015		

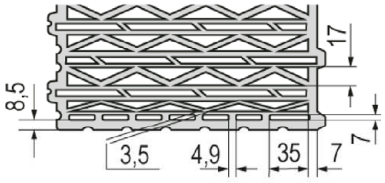

Dimension see also Annex B 15

Table C32.1: Installation parameters
(Pre-positioned anchorage with perforated sleeve FIS H K)

Anchor rod			**M6**	**M8**	**M6**	**M8**	**-**		**M8**	**M10**	**M8**	**M10**	**-**		**M12**	**M16**	**M12**	**M16**	**M12**	**M16**
Internal threaded anchor FIS E			**-**		**-**		**M6**	**M8**	**-**		**-**		**M10**	**M12**	**-**		**-**		**-**	
							11x85						**15x85**							
Perforated sleeve FIS H K			**12x50**		**12x85**		**16x85**				**16x130**		**20x85**				**20x130**		**20x200**	
Anchor rod and internal threaded anchor FIS E with perforated sleeve FIS H K																				
Max. installation torque	max T_{inst}	[Nm]	3	5	3	5	3	5	5											
General installation parameters																				
Edge distance	$c_{min} = c_{cr}$	[mm]	60																	
Spacing	s_{min} ∥	[mm]	80																	
	s_{cr} ∥	[mm]	250																	
	s_{min} ⊥	[mm]	80																	
	s_{cr} ⊥	[mm]	250																	
Drilling method																				
Rotary drilling with carbide drill																				

1) The compressive strength of the single brick must not be less than 80% of the mean compressive strength.

Table C32.2: Group factors

Anchor rod			**M6**	**M8**	**M6**	**M8**	**-**		**M8**	**M10**	**M8**	**M10**	**-**		**M12**	**M16**	**M12**	**M16**	**M12**	**M16**
Internal threaded anchor FIS E			**-**		**-**		**M6**	**M8**	**-**		**-**		**M10**	**M12**	**-**					**-**
							11x85						**15x85**							
Perforated sleeve FIS H K			**12x50**		**12x85**		**16x85**				**16x130**		**20x85**				**20x130**		**20x200**	
Group factors	$\alpha_{g,N}$ (s_{min} ∥)	[-]	1,3																	
	$\alpha_{g,V}$ (s_{min} ∥)	[-]	1,2																	
	$\alpha_{g,N}$ (s_{min} ⊥)	[-]	1,3																	
	$\alpha_{g,V}$ (s_{min} ⊥)	[-]	1,0																	

fischer injection system FIS V Plus for masonry

Performance
Vertical perforated brick HLz, U8, dimensions, installation parameters

Annex C 32

Vertical perforated brick HLz, U8, EN 771-1:2011+A1:2015

Table C33.1: Installation parameters
(Push through anchorage with perforated sleeve FIS H K)

Anchor rod			**M10**	**M12**	**M16**
Perforated sleeve FIS H K			**18x130/200**		**22x130/200**
Anchor rod with perforated sleeve FIS H K					
Max. installation torque	max T_{inst}	[Nm]	5		
General installation parameters					
Edge distance	$c_{min} = c_{cr}$	[mm]	60		
Spacing	s_{min} ll		80		
	s_{cr} ll		250		
	s_{min} ⊥		80		
	s_{cr} ⊥		250		
Drilling method					
Rotary drilling with carbide drill					

Table C33.2: Group factors

Anchor rod			**M10**	**M12**	**M16**
Perforated sleeve FIS H K			**18x130/200**		**22x130/200**
Group factors	$\alpha_{g,N}$ (s_{min} ll)	[-]	1,3		
	$\alpha_{g,V}$ (s_{min} ll)		1,2		
	$\alpha_{g,N}$ (s_{min} ⊥)		1,3		
	$\alpha_{g,V}$ (s_{min} ⊥)		1,0		

fischer injection system FIS V Plus for masonry

Performance
Vertical perforated brick HLz, U8, dimensions, installation parameters

Annex C 33

Vertical perforated brick HLz, U8, EN 771-1:2011+A1:2015

Table C34.1: Characteristic resistance to pull-out failure or brick breakout failure of a single anchor under tension loading (Pre-positioned anchorage)

Anchor rod	**M6**	**M8**	**M6**	**M8**	**-**	**M8**	**M10**	**M8**	**M10**	**-**	**M12**	**M16**	**M12**	**M16**	**M12**	**M16**
Internal threaded anchor FIS E	**-**		**-**		**M6 M8**	**-**		**-**		**M10 M12**	**-**		**-**		**-**	
					11x85					**15x85**						
Perforated sleeve FIS H K	**12x50**		**12x85**		**16x85**			**16x130**		**20x85**			**20x130**		**20x200**	

Tension resistance $N_{Rk} = N_{Rk,p} = N_{Rk,b} = N_{Rk,p,c} = N_{Rk,b,c}$ [kN] depending on the mean compressive strength f_b; Installation and use condition w/w, w/d, d/d; (temperature range 50/80°C) [2)]

Mean compressive strength / Min. compressive strength single brick [1)]	Use con-ditions			
5 / 4 N/mm²	w/w	w/d	1,2	1,2
	d/d		1,2	1,5
8 / 6 N/mm²	w/w	w/d	1,5	1,5
	d/d		1,5	1,5
10 / 8 N/mm²	w/w	w/d	1,5	2,0
	d/d		2,0	2,0

1) The compressive strength of the single brick must not be less than 80% of the mean compressive strength.
2) For temperature range 72/120°C: $N_{Rk\,(72/120°C)} = 0{,}83 \cdot N_{Rk\,(50/80°C)}$.

Table C34.2: Characteristic resistance to pull-out failure or brick breakout failure of a single anchor under tension loading (Push through anchorage)

Anchor rod	**M10**	**M12**	**M16**
Perforated sleeve FIS H K	**18x130/200**		**22x130/200**

Tension resistance $N_{Rk} = N_{Rk,p} = N_{Rk,b} = N_{Rk,p,c} = N_{Rk,b,c}$ [kN] depending on the mean compressive strength f_b; Installation and use condition w/w, w/d, d/d; (temperature range 50/80°C) [2)]

Mean compressive strength / Min. compressive strength single brick [1)]	Use con-ditions		
5 / 4 N/mm²	w/w	w/d	1,2
	d/d		1,5
8 / 6 N/mm²	w/w	w/d	1,5
	d/d		1,5
10 / 8 N/mm²	w/w	w/d	2,0
	d/d		2,0

1) The compressive strength of the single brick must not be less than 80% of the mean compressive strength.
2) For temperature range 72/120°C: $N_{Rk\,(72/120°C)} = 0{,}83 \cdot N_{Rk\,(50/80°C)}$.

Factor for job site tests and displacements see annex C 123.

fischer injection system FIS V Plus for masonry

Performance
Vertical perforated brick HLz, U8, Characteristic resistance under tension loading

Annex C 34

Vertical perforated brick HLz, U8, EN 771-1:2011+A1:2015

Table C35.1: Characteristic resistance to local brick failure or brick edge failure of a single anchor under shear loading (Pre-positioned anchorage)

Anchor rod	**M6**	**M8**	**M6**	**M8**	**-**	**M8**	**M10**	**M8**	**M10**	**-**	**M12**	**M16**	**M12**	**M16**	**M12**	**M16**
Internal threaded anchor FIS E	**-**		**-**		**M6 M8**	**-**		**-**		**M10 M12**	**-**		**-**		**-**	
					11x85					**15x85**						
Perforated sleeve FIS H K	**12x50**		**12x85**		**16x85**			**16x130**		**20x85**			**20x130**		**20x200**	

Shear resistance $V_{Rk} = V_{Rk,b} = V_{Rk,c,II} = V_{Rk,c,\perp}$ [kN] depending on the mean compressive strength f_b; Installation and use condition w/w, w/d, d/d; (temperature range 50/80°C and 72/120°C)

Mean compressive strength / Min. compressive strength single brick [1]	Use con-ditions	
5 / 4 N/mm²	w/w w/d	1,2
	d/d	
8 / 6 N/mm²	w/w w/d	1,5
	d/d	
10 / 8 N/mm²	w/w w/d	1,5
	d/d	

[1] The compressive strength of the single brick must not be less than 80% of the mean compressive strength.

Table C35.2: Characteristic resistance to local brick failure or brick edge failure of a single anchor under shear loading (Push through anchorage)

Anchor rod	**M10**	**M12**	**M16**
Perforated sleeve FIS H K	**18x130/200**		**22x130/200**

Shear resistance $V_{Rk} = V_{Rk,b} = V_{Rk,c,II} = V_{Rk,c,\perp}$ [kN] depending on the mean compressive strength f_b; Installation and use condition w/w, w/d, d/d; (temperature range 50/80°C and 72/120°C)

Mean compressive strength / Min. compressive strength single brick [1]	Use con-ditions	
5 / 4 N/mm²	w/w w/d	1,2
	d/d	
8 / 6 N/mm²	w/w w/d	1,5
	d/d	
10 / 8 N/mm²	w/w w/d	1,5
	d/d	

[1] The compressive strength of the single brick must not be less than 80% of the mean compressive strength. Factor for job site tests and displacements see annex C 123.

Vertical perforated brick HLz, T10, T11, EN 771-1:2011+A1:2015

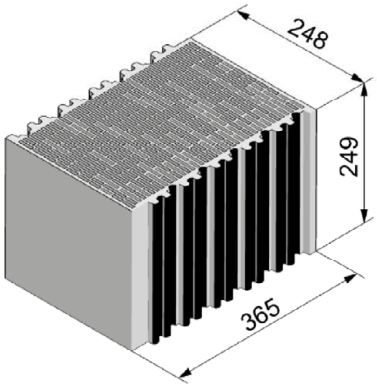

Producer		e.g. Wienerberger		
Nominal dimensions	[mm]	length L	width W	height H
		248	365	249
Mean gross dry density ρ	[kg/dm³]	0,7		
Mean compressive strength / Min. compressive strength single brick [1)]	[N/mm²]	10 / 8 or 12,5 / 10 or 15 / 12		
Standard or annex		EN 771-1:2011+A1:2015		

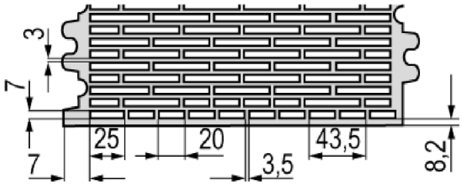

Dimension see also Annex B 16

Table C36.1: Installation parameters
(Pre-positioned anchorage with perforated sleeve FIS H K)

Anchor rod	**M6**	**M8**	**M6**	**M8**	**-**	**M8**	**M10**	**M8**	**M10**	**-**	**M12**	**M16**	**M12**	**M16**	**M12**	**M16**
Internal threaded anchor FIS E	**-**		**-**		**M6 / M8** **11x85**	**-**		**-**		**M10 / M12** **15x85**	**-**		**-**		**-**	
Perforated sleeve FIS H K	**12x50**		**12x85**		**16x85**			**16x130**		**20x85**			**20x130**		**20x200**	

Anchor rod and internal threaded anchor FIS E with perforated sleeve FIS H K							
Max. installation torque	max T_{inst}	[Nm]	3	5	3	5	
General installation parameters							
Edge distance	$c_{min} = c_{cr}$	[mm]	60				
Spacing	s_{min} ∥	[mm]	80				
	s_{cr} ∥	[mm]	250				
	s_{min} ⊥	[mm]	80				
	s_{cr} ⊥	[mm]	250				
Drilling method							
Rotary drilling with carbide drill							

[1)] The compressive strength of the single brick must not be less than 80% of the mean compressive strength.

Table C36.2: Group factors

Anchor rod	**M6**	**M8**	**M6**	**M8**	**-**	**M8**	**M10**	**M8**	**M10**	**-**	**M12**	**M16**	**M12**	**M16**	**M12**	**M16**
Internal threaded anchor FIS E	**-**		**-**		**M6 / M8** **11x85**	**-**		**-**		**M10 / M12** **15x85**	**-**		**-**		**-**	
Perforated sleeve FIS H K	**12x50**		**12x85**		**16x85**			**16x130**		**20x85**			**20x130**		**20x200**	

Group factors	$\alpha_{g,N}$ (s_{min} ∥)	[-]	1,7
	$\alpha_{g,V}$ (s_{min} ∥)	[-]	0,5
	$\alpha_{g,N}$ (s_{min} ⊥)	[-]	1,3
	$\alpha_{g,V}$ (s_{min} ⊥)	[-]	0,5

fischer injection system FIS V Plus for masonry

Performance
Vertical perforated brick HLz, T10, T11, dimensions, installation parameters

Annex C 36

Vertical perforated brick HLz, T10, T11, EN 771-1:2011+A1:2015

Table C37.1: Installation parameters
(Push through anchorage with perforated sleeve FIS H K)

Anchor rod			**M10**	**M12**	**M16**
Perforated sleeve FIS H K			**18x130/200**		**22x130/200**
Anchor rod with perforated sleeve FIS H K					
Max. installation torque	max T_{inst}	[Nm]	5		
General installation parameters					
Edge distance	$c_{min} = c_{cr}$	[mm]	60		
Spacing	s_{min} ∥	[mm]	80		
	s_{cr} ∥	[mm]	250		
	s_{min} ⊥	[mm]	80		
	s_{cr} ⊥	[mm]	250		
Drilling method					
Rotary drilling with carbide drill					

Table C37.2: Group factors

Anchor rod			**M10**	**M12**	**M16**
Perforated sleeve FIS H K			**18x130/200**		**22x130/200**
Group factors	$\alpha_{g,N}$ (s_{min} ∥)	[-]	1,7		
	$\alpha_{g,V}$ (s_{min} ∥)	[-]	0,5		
	$\alpha_{g,N}$ (s_{min} ⊥)	[-]	1,3		
	$\alpha_{g,V}$ (s_{min} ⊥)	[-]	0,5		

fischer injection system FIS V Plus for masonry

Performance
Vertical perforated brick HLz, T10, T11, dimensions, installation parameters

Annex C 37

Vertical perforated brick HLz, T10, T11, EN 771-1:2011+A1:2015

Table C38.1: Characteristic resistance to pull-out failure or brick breakout failure of a single anchor under tension loading (Pre-positioned anchorage)

Anchor rod	**M6**	**M8**	**M6**	**M8**	**-**	**M8**	**M10**	**M8**	**M10**	**-**	**M12**	**M16**	**M12**	**M16**	**M12**	**M16**
Internal threaded anchor FIS E	**-**		**-**		**M6 / M8**	**-**		**-**		**M10 / M12**	**-**		**-**		**-**	
					11x85					**15x85**						
Perforated sleeve FIS H K	**12x50**		**12x85**		**16x85**			**16x130**		**20x85**			**20x130**		**20x200**	

Tension resistance $N_{Rk} = N_{Rk,p} = N_{Rk,b} = N_{Rk,p,c} = N_{Rk,b,c}$ [kN] depending on the mean compressive strength f_b; Installation and use condition w/w, w/d, d/d; (temperature range 50/80°C) [2)]

Mean compressive strength / Min. compressive strength single brick [1)]	Use con-ditions			
10 / 8 N/mm²	w/w	w/d	1,5	1,5
	d/d		1,5	2,0
12,5 / 10 N/mm²	w/w	w/d	1,5	2,0
	d/d		2,0	2,0
15 / 12 N/mm²	w/w	w/d	2,0	2,0
	d/d		2,0	2,5

1) The compressive strength of the single brick must not be less than 80% of the mean compressive strength.
2) For temperature range 72/120°C: $N_{Rk\,(72/120°C)} = 0{,}83 \cdot N_{Rk\,(50/80°C)}$.

Table C38.2: Characteristic resistance to pull-out failure or brick breakout failure of a single anchor under tension loading (Push through anchorage)

Anchor rod	**M10**	**M12**	**M16**
Perforated sleeve FIS H K	**18x130/200**		**22x130/200**

Tension resistance $N_{Rk} = N_{Rk,p} = N_{Rk,b} = N_{Rk,p,c} = N_{Rk,b,c}$ [kN] depending on the mean compressive strength f_b; Installation and use condition w/w, w/d, d/d; (temperature range 50/80°C) [2)]

Mean compressive strength / Min. compressive strength single brick [1)]	Use con-ditions			
10 / 8 N/mm²	w/w	w/d	1,5	1,5
	d/d		2,0	2,0
12,5 / 10 N/mm²	w/w	w/d	2,0	2,0
	d/d		2,0	2,0
15 / 12 N/mm²	w/w	w/d	2,0	2,0
	d/d		2,5	2,5

1) The compressive strength of the single brick must not be less than 80% of the mean compressive strength.
2) For temperature range 72/120°C: $N_{Rk\,(72/120°C)} = 0{,}83 \cdot N_{Rk\,(50/80°C)}$.

Factor for job site tests and displacements see annex C 123.

fischer injection system FIS V Plus for masonry

Performance
Vertical perforated brick HLz, T10, T11, Characteristic resistance under tension loading

Annex C 38

Vertical perforated brick HLz, T10, T11, EN 771-1:2011+A1:2015

Table C39.1: Characteristic resistance to local brick failure or brick edge failure of a single anchor under shear loading (Pre-positioned anchorage)

Anchor rod	**M6**	**M8**	**M6**	**M8**	**-**		**M8**	**M10**	**M8**	**M10**	**-**		**M12**	**M16**	**M12**	**M16**	**M12**	**M16**
Internal threaded anchor FIS E	**-**		**-**		**M6**	**M8**	**-**		**-**		**M10**	**M12**	**-**		**-**		**-**	
					11x85						**15x85**							
Perforated sleeve FIS H K	**12x50**		**12x85**		**16x85**				**16x130**		**20x85**				**20x130**		**20x200**	

Shear resistance $V_{Rk} = V_{Rk,b} = V_{Rk,c,II} = V_{Rk,c,\perp}$ [kN] depending on the mean compressive strength f_b; Installation and use condition w/w, w/d, d/d; (temperature range 50/80°C and 72/120°C)

Mean compressive strength / Min. compressive strength single brick [1]	Use con-ditions						
10 / 8 N/mm²	w/w	w/d	d/d	0,9	1,5	2,0
12,5 / 10 N/mm²	w/w	w/d	d/d	0,9	1,5	2,0
15 / 12 N/mm²	w/w	w/d	d/d	1,2	2,0	2,0

[1] The compressive strength of the single brick must not be less than 80% of the mean compressive strength.

Table C39.2: Characteristic resistance to local brick failure or brick edge failure of a single anchor under shear loading (Push through anchorage)

Anchor rod	**M10**	**M12**	**M16**
Perforated sleeve FIS H K	**18x130/200**		**22x130/200**

Shear resistance $V_{Rk} = V_{Rk,b} = V_{Rk,c,II} = V_{Rk,c,\perp}$ [kN] depending on the mean compressive strength f_b; Installation and use condition w/w, w/d, d/d; (temperature range 50/80°C and 72/120°C)

Mean compressive strength / Min. compressive strength single brick [1]	Use con-ditions				
10 / 8 N/mm²	w/w	w/d	d/d	1,5	2,0
12,5 / 10 N/mm²	w/w	w/d	d/d	1,5	2,0
15 / 12 N/mm²	w/w	w/d	d/d	2,0	2,0

[1] The compressive strength of the single brick must not be less than 80% of the mean compressive strength.

Factor for job site tests and displacements see annex C 123.

Vertical perforated brick HLz, T7 PF, filled with perlit, EN 771-1:2011+A1:2015

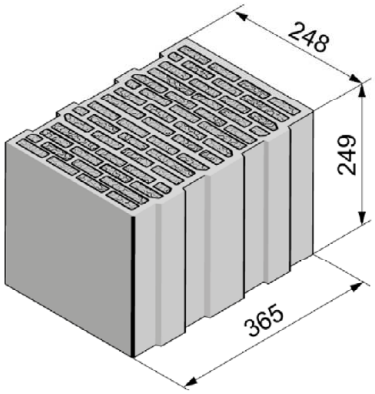

Producer		e.g. Wienerberger		
Nominal dimensions	[mm]	length L	width W	height H
		248	365	249
Mean gross dry density ρ	[kg/dm³]	0,5		
Mean compressive strength / Min. compressive strength single brick [1)]	[N/mm²]	5 / 4 or 8 / 6		
Standard or annex		EN 771-1:2011+A1:2015		

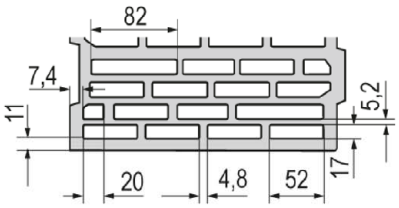

Dimension see also Annex B 16

Table C40.1: Installation parameters
(Pre-positioned anchorage with perforated sleeve FIS H K)

Anchor rod			**M6**	**M8**	**M6**	**M8**	**-**	**M8**	**M10**	**M8**	**M10**	**-**	**M12**	**M16**	**M12**	**M16**	**M12**	**M16**
Internal threaded anchor FIS E			**-**		**-**		**M6 M8 11x85**	**-**		**-**		**M10 M12 15x85**	**-**		**-**		**-**	
Perforated sleeve FIS H K			**12x50**		**12x85**		**16x85**			**16x130**		**20x85**			**20x130**		**20x200**	
Anchor rod and internal threaded anchor FIS E with perforated sleeve FIS H K																		
Max. installation torque	max T_{inst}	[Nm]	2					5		2		5						
General installation parameters																		
Edge distance	$c_{min} = c_{cr}$	[mm]	60															
Spacing	s_{min} ∥	[mm]	80															
	s_{cr} ∥	[mm]	250															
	s_{min} ⊥	[mm]	80															
	s_{cr} ⊥	[mm]	250															
Drilling method																		
Rotary drilling with carbide drill																		

1) The compressive strength of the single brick must not be less than 80% of the mean compressive strength.

Table C40.2: Group factors

Anchor rod			**M6**	**M8**	**M6**	**M8**	**-**	**M8**	**M10**	**M8**	**M10**	**-**	**M12**	**M16**	**M12**	**M16**	**M12**	**M16**
Internal threaded anchor FIS E			**-**		**-**		**M6 M8 11x85**	**-**		**-**		**M10 M12 15x85**	**-**		**-**		**-**	
Perforated sleeve FIS H K			**12x50**		**12x85**		**16x85**			**16x130**		**20x85**			**20x130**		**20x200**	
Group factors	$\alpha_{g,N}$ (s_{min} ∥)	[-]	1,1															
	$\alpha_{g,V}$ (s_{min} ∥)	[-]	1,2															
	$\alpha_{g,N}$ (s_{min} ⊥)	[-]	1,1															
	$\alpha_{g,V}$ (s_{min} ⊥)	[-]	1,2															

fischer injection system FIS V Plus for masonry

Performance
Vertical perforated brick HLz, T7 PF, filled with perlite, dimensions, installation parameters

Annex C 40

Vertical perforated brick HLz, T7 PF, filled with perlite, EN 771-1:2011+A1:2015

Table C41.1: Installation parameters
(Push through anchorage with perforated sleeve FIS H K)

Anchor rod			**M10**	**M12**	**M16**
Perforated sleeve FIS H K			**18x130/200**		**22x130/200**
Anchor rod with perforated sleeve FIS H K					
Max. installation torque	max T_{inst}	[Nm]	5		
General installation parameters					
Edge distance	$c_{min} = c_{cr}$	[mm]	60		
Spacing	s_{min} II	[mm]	80		
	s_{cr} II	[mm]	250		
	s_{min} ⊥	[mm]	80		
	s_{cr} ⊥	[mm]	250		
Drilling method					
Rotary drilling with carbide drill					

Table C41.2: Group factors

Anchor rod			**M10**	**M12**	**M16**
Perforated sleeve FIS H K			**18x130/200**		**22x130/200**
Group factors	$\alpha_{g,N}$ (s_{min} II)	[-]	1,1		
	$\alpha_{g,V}$ (s_{min} II)	[-]	1,2		
	$\alpha_{g,N}$ (s_{min} ⊥)	[-]	1,1		
	$\alpha_{g,V}$ (s_{min} ⊥)	[-]	1,2		

fischer injection system FIS V Plus for masonry

Performance
Vertical perforated brick HLz, T7 PF, filled with perlite, dimensions, installation parameters

Annex C 41

Vertical perforated brick HLz, T7 PF, filled with perlite, EN 771-1:2011+A1:2015

Table C42.1: Characteristic resistance to pull-out failure or brick breakout failure of a single anchor under tension loading (Pre-positioned anchorage)

Anchor rod	M6	M8	M6	M8	-		M8	M10	M8	M10	-		M12	M16	M12	M16	M12	M16
Internal threaded anchor FIS E	-		-		M6	M8	-		-		M10	M12	-		-		-	
					11x85						15x85							
Perforated sleeve FIS H K	12x50		12x85		16x85				16x130		20x85				20x130		20x200	

Tension resistance $N_{Rk} = N_{Rk,p} = N_{Rk,b} = N_{Rk,p,c} = N_{Rk,b,c}$ [kN] depending on the mean compressive strength f_b; Installation and use condition w/w, w/d, d/d; (temperature range 50/80°C) [2)]

Mean compressive strength / Min. compressive strength single brick [1)]	Use con-ditions																	
5 / 4 N/mm²	w/w	w/d	1,2						1,2		1,2				1,2		2,0	
	d/d		1,5						1,5		1,5				1,5		2,0	
8 / 6 N/mm²	w/w	w/d	1,5						1,5		1,5				1,5		2,5	
	d/d		1,5						2,0		1,5				2,0		3,0	

1) The compressive strength of the single brick must not be less than 80% of the mean compressive strength.
2) For temperature range 72/120°C: $N_{Rk\,(72/120°C)} = 0{,}83 \cdot N_{Rk\,(50/80°C)}$.

Table C42.2: Characteristic resistance to pull-out failure or brick breakout failure of a single anchor under tension loading (Push through anchorage)

Anchor rod	M10	M12	M16
Perforated sleeve FIS H K	18x130/200		22x130/200

Tension resistance $N_{Rk} = N_{Rk,p} = N_{Rk,b} = N_{Rk,p,c} = N_{Rk,b,c}$ [kN] depending on the mean compressive strength f_b; Installation and use condition w/w, w/d, d/d; (temperature range 50/80°C) [2)]

Mean compressive strength / Min. compressive strength single brick [1)]	Use con-ditions			
5 / 4 N/mm²	w/w	w/d	1,2	1,2
	d/d		1,5	1,5
8 / 6 N/mm²	w/w	w/d	1,5	1,5
	d/d		2,0	2,0

1) The compressive strength of the single brick must not be less than 80% of the mean compressive strength.
2) For temperature range 72/120°C: $N_{Rk\,(72/120°C)} = 0{,}83 \cdot N_{Rk\,(50/80°C)}$.

Factor for job site tests and displacements see annex C 123.

Vertical perforated brick HLz, T7 PF, filled with perlite, EN 771-1:2011+A1:2015

Table C43.1: Characteristic resistance to local brick failure or brick edge failure of a single anchor under shear loading (Pre-positioned anchorage)

Anchor rod	**M6**	**M8**	**M6**	**M8**	**-**		**M8**	**M10**	**M8**	**M10**	**-**		**M12**	**M16**	**M12**	**M16**	**M12**	**M16**
Internal threaded anchor FIS E	**-**		**-**		**M6**	**M8**	**-**		**-**		**M10**	**M12**	**-**		**-**		**-**	
					11x85						**15x85**							
Perforated sleeve FIS H K	**12x50**		**12x85**		**16x85**				**16x130**		**20x85**				**20x130**		**20x200**	
Shear resistance $V_{Rk} = V_{Rk,b} = V_{Rk,c,II} = V_{Rk,c,\perp}$ [kN] depending on the mean compressive strength f_b; Installation and use condition w/w, w/d, d/d; (temperature range 50/80°C and 72/120°C)																		
Mean compressive strength / Min. compressive strength single brick [1]	Use con-ditions																	
5 / 4 N/mm²	w/w w/d d/d		0,9		1,5						1,2							
8 / 6 N/mm²	w/w w/d d/d		1,2		2,0						1,5							

[1] The compressive strength of the single brick must not be less than 80% of the mean compressive strength.

Table C43.2: Characteristic resistance to local brick failure or brick edge failure of a single anchor under shear loading (Push through anchorage)

Anchor rod	**M10**	**M12**	**M16**
Perforated sleeve FIS H K	**18x130/200**		**22x130/200**
Shear resistance $V_{Rk} = V_{Rk,b} = V_{Rk,c,II} = V_{Rk,c,\perp}$ [kN] depending on the mean compressive strength f_b; Installation and use condition w/w, w/d, d/d; (temperature range 50/80°C and 72/120°C)			
Mean compressive strength / Min. compressive strength single brick [1]	Use con-ditions		
5 / 4 N/mm²	w/w w/d d/d	1,5	1,2
8 / 6 N/mm²	w/w w/d d/d	2,0	1,5

[1] The compressive strength of the single brick must not be less than 80% of the mean compressive strength.

Factor for job site tests and displacements see annex C 123.

Vertical perforated brick HLz, T9 MW, filled with mineral wool, EN 771-1:2011+A1:2015

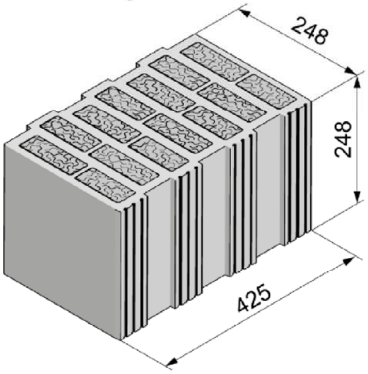

Producer		e.g. Wienerberger		
Nominal dimensions	[mm]	length L	width W	height H
		248	425	248
Mean gross dry density ρ	[kg/dm³]	0,8		
Mean compressive strength / Min. compressive strength single brick [1)]	[N/mm²]	5 / 4 or 8 / 6 or 10 / 8		
Standard or annex		EN 771-1:2011+A1:2015		

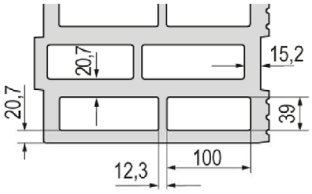

Dimension see also Annex B 16

Table C44.1: Installation parameters
(Pre-positioned anchorage with perforated sleeve FIS H K)

Anchor rod			**M6**	**M8**	**M6**	**M8**	**-**	**M8**	**M10**	**M8**	**M10**	**-**	**M12**	**M16**	**M12**	**M16**	**M12**	**M16**
Internal threaded anchor FIS E			**-**		**-**		**M6 M8 11x85**	**-**		**-**		**M10 M12 15x85**	**-**		**-**		**-**	
Perforated sleeve FIS H K			**12x50**		**12x85**		**16x85**			**16x130**		**20x85**			**20x130**		**20x200**	
Anchor rod and internal threaded anchor FIS E with perforated sleeve FIS H K																		
Max. installation torque	max T_{inst}	[Nm]	3					5		3		5						
General installation parameters																		
Edge distance	$c_{min} = c_{cr}$	[mm]	60															
Spacing	s_{min} ∥	[mm]	80															
	s_{cr} ∥	[mm]	250															
	s_{min} ⊥	[mm]	80															
	s_{cr} ⊥	[mm]	250															
Drilling method																		
Rotary drilling with carbide drill																		

1) The compressive strength of the single brick must not be less than 80% of the mean compressive strength.

Table C44.2: Group factors

Anchor rod			**M6**	**M8**	**M6**	**M8**	**-**	**M8**	**M10**	**M8**	**M10**	**-**	**M12**	**M16**	**M12**	**M16**	**M12**	**M16**
Internal threaded anchor FIS E			**-**		**-**		**M6 M8 11x85**	**-**		**-**		**M10 M12 15x85**	**-**		**-**		**-**	
Perforated sleeve FIS H K			**12x50**		**12x85**		**16x85**			**16x130**		**20x85**			**20x130**		**20x200**	
Group factors	$\alpha_{g,N}$ (s_{min} ∥)	[-]	1,3															
	$\alpha_{g,V}$ (s_{min} ∥)	[-]	1,2															
	$\alpha_{g,N}$ (s_{min} ⊥)	[-]	0,6															
	$\alpha_{g,V}$ (s_{min} ⊥)	[-]	1,2															

fischer injection system FIS V Plus for masonry

Performance
Vertical perforated brick HLz, T9 MW, filled with mineral wool, dimensions, installation parameters

Annex C 44

Vertical perforated brick HLz, T9 MW, filled with mineral wool, EN 771-1:2011+A1:2015

Table C45.1: Installation parameters
(Push through anchorage with perforated sleeve FIS H K)

Anchor rod			**M10**	**M12**	**M16**
Perforated sleeve FIS H K			**18x130/200**		**22x130/200**
Anchor rod with perforated sleeve FIS H K					
Max. installation torque	max T_{inst}	[Nm]	5		
General installation parameters					
Edge distance	$c_{min} = c_{cr}$	[mm]	60		
Spacing	s_{min} II		80		
	s_{cr} II		250		
	s_{min} ⊥		80		
	s_{cr} ⊥		250		
Drilling method					
Rotary drilling with carbide drill					

Table C45.2: Group factors

Anchor rod			**M10**	**M12**	**M16**
Perforated sleeve FIS H K			**18x130/200**		**22x130/200**
Group factors	$\alpha_{g,N}$ (s_{min} II)	[-]	1,3		
	$\alpha_{g,V}$ (s_{min} II)		1,2		
	$\alpha_{g,N}$ (s_{min} ⊥)		0,6		
	$\alpha_{g,V}$ (s_{min} ⊥)		1,2		

fischer injection system FIS V Plus for masonry

Performance
Vertical perforated brick HLz, T9 MW, filled with mineral wool, dimensions, installation parameters

Annex C 45

Vertical perforated brick HLz, T9 MW, filled with mineral wool, EN 771-1:2011+A1:2015

Table C46.1: Characteristic resistance to pull-out failure or brick breakout failure of a single anchor under tension loading (Pre-positioned anchorage)

Anchor rod	**M6**	**M8**	**M6**	**M8**	**-**	**M8**	**M10**	**M8**	**M10**	**-**	**M12**	**M16**	**M12**	**M16**	**M12**	**M16**
Internal threaded anchor FIS E	**-**		**-**		**M6** / **11x85**	**M8**	**-**	**-**		**M10** / **15x85**	**M12**	**-**	**-**		**-**	
Perforated sleeve FIS H K	**12x50**		**12x85**		**16x85**			**16x130**		**20x85**			**20x130**		**20x200**	

Tension resistance $N_{Rk} = N_{Rk,p} = N_{Rk,b} = N_{Rk,p,c} = N_{Rk,b,c}$ [kN] depending on the mean compressive strength f_b; Installation and use condition w/w, w/d, d/d; (temperature range 50/80°C) [2)]

Mean compressive strength / Min. compressive strength single brick [1)]	Use con-ditions															
5 / 4 N/mm²	w/w	w/d	1,5		2,0		3,0		2,5		4,0					
	d/d		2,0		2,5		3,0		2,5		4,5					
8 / 6 N/mm²	w/w	w/d	2,0		2,5		3,5		3,0		5,0					
	d/d		2,0		3,0		4,0		3,0		5,5					
10 / 8 N/mm²	w/w	w/d	2,5		3,0		4,0		3,5		6,0					
	d/d		2,5		3,0		4,5		3,5		6,5					

1) The compressive strength of the single brick must not be less than 80% of the mean compressive strength.
2) For temperature range 72/120°C: $N_{Rk\,(72/120°C)} = 0{,}83 \cdot N_{Rk\,(50/80°C)}$.

Table C46.2: Characteristic resistance to pull-out failure or brick breakout failure of a single anchor under tension loading (Push through anchorage)

Anchor rod	**M10**	**M12**	**M16**
Perforated sleeve FIS H K	**18x130/200**		**22x130/200**

Tension resistance $N_{Rk} = N_{Rk,p} = N_{Rk,b} = N_{Rk,p,c} = N_{Rk,b,c}$ [kN] depending on the mean compressive strength f_b; Installation and use condition w/w, w/d, d/d; (temperature range 50/80°C) [2)]

Mean compressive strength / Min. compressive strength single brick [1)]	Use con-ditions			
5 / 4 N/mm²	w/w	w/d	3,0	4,0
	d/d		3,0	4,5
8 / 6 N/mm²	w/w	w/d	3,5	5,0
	d/d		4,0	5,5
10 / 8 N/mm²	w/w	w/d	4,0	6,0
	d/d		4,5	6,5

1) The compressive strength of the single brick must not be less than 80% of the mean compressive strength.
2) For temperature range 72/120°C: $N_{Rk\,(72/120°C)} = 0{,}83 \cdot N_{Rk\,(50/80°C)}$.

Factor for job site tests and displacements see annex C 123.

fischer injection system FIS V Plus for masonry

Performance
Vertical perforated brick HLz, T9 MW, filled with mineral wool;
Characteristic resistance under tension loading

Annex C 46

Vertical perforated brick HLz, T9 MW, filled with mineral wool, EN 771-1:2011+A1:2015

Table C47.1: Characteristic resistance to local brick failure or brick edge failure of a single anchor under shear loading (Pre-positioned anchorage)

Anchor rod		**M6**	**M8**	**M6**	**M8**	**-**	**M8**	**M10**	**M8**	**M10**	**-**	**M12**	**M16**	**M12**	**M16**	**M12**	**M16**
Internal threaded anchor FIS E		**-**		**-**		**M6 M8**	**-**		**-**		**M10 M12**	**-**		**-**		**-**	
						11x85					**15x85**						
Perforated sleeve FIS H K		**12x50**		**12x85**		**16x85**			**16x130**		**20x85**			**20x130**		**20x200**	
Shear resistance $V_{Rk} = V_{Rk,b} = V_{Rk,c,II} = V_{Rk,c,\perp}$ [kN] depending on the mean compressive strength f_b; Installation and use condition w/w, w/d, d/d; (temperature range 50/80°C and 72/120°C)																	
Mean compressive strength / Min. compressive strength single brick [1]	Use con-ditions																
5 / 4 N/mm²	w/w w/d d/d	2,0		2,0					2,5		2,0					1,5	
8 / 6 N/mm²	w/w w/d d/d	2,5		2,5					3,0		2,5					2,0	
10 / 8 N/mm²	w/w w/d d/d	2,5		3,0					4,0		3,0					2,5	

[1] The compressive strength of the single brick must not be less than 80% of the mean compressive strength.

Table C47.2: Characteristic resistance to local brick failure or brick edge failure of a single anchor under shear loading (Push through anchorage)

Anchor rod		**M10**	**M12**	**M16**
Perforated sleeve FIS H K		**18x130/200**		**22x130/200**
Shear resistance $V_{Rk} = V_{Rk,b} = V_{Rk,c,II} = V_{Rk,c,\perp}$ [kN] depending on the mean compressive strength f_b; Installation and use condition w/w, w/d, d/d; (temperature range 50/80°C and 72/120°C)				
Mean compressive strength / Min. compressive strength single brick [1]	Use con-ditions			
5 / 4 N/mm²	w/w w/d d/d	2,5		2,0
8 / 6 N/mm²	w/w w/d d/d	3,0		2,5
10 / 8 N/mm²	w/w w/d d/d	4,0		3,0

[1] The compressive strength of the single brick must not be less than 80% of the mean compressive strength.

Factor for job site tests and displacements see annex C 123.

Vertical perforated brick HLz, FZ 7, filled with mineral wool, EN 771-1:2011+A1:2015

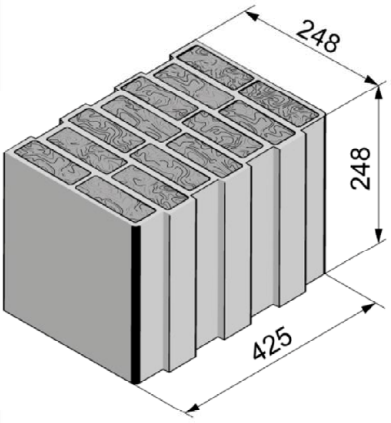

Producer		e.g. Wienerberger		
Nominal dimensions	[mm]	length L	width W	height H
		248	425	248
Mean gross dry density ρ	[kg/dm³]	0,8		
Mean compressive strength / Min. compressive strength single brick [1]	[N/mm²]	5 / 4 or 7,5 / 6 or 10 / 8		
Standard or annex		EN 771-1:2011+A1:2015		

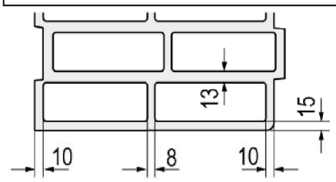

Dimension see also Annex B 16

Table C48.1: Installation parameters
(Pre-positioned anchorage with perforated sleeve FIS H K)

Anchor rod			**M6**	**M8**	**M6**	**M8**	**-**	**M8**	**M10**	**M8**	**M10**	**-**	**M12**	**M16**	**M12**	**M16**	**M12**	**M16**
Internal threaded anchor FIS E			-		-		**M6** / **11x85**	**M8**	-	-		**M10** / **15x85**	**M12**	-	-		-	
Perforated sleeve FIS H K			**12x50**		**12x85**		**16x85**			**16x130**		**20x85**			**20x130**		**20x200**	
Anchor rod and internal threaded anchor FIS E with perforated sleeve FIS H K																		
Max. installation torque	max T_{inst}	[Nm]	2						5	2		5						
General installation parameters																		
Edge distance	$c_{min} = c_{cr}$	[mm]	60															
Spacing	s_{min} ∥	[mm]	80															
	s_{cr} ∥	[mm]	250															
	s_{min} ⊥	[mm]	80															
	s_{cr} ⊥	[mm]	250															
Drilling method																		
Rotary drilling with carbide drill																		

[1] The compressive strength of the single brick must not be less than 80% of the mean compressive strength.

Table C48.2: Group factors

Anchor rod			**M6**	**M8**	**M6**	**M8**	**-**	**M8**	**M10**	**M8**	**M10**	**-**	**M12**	**M16**	**M12**	**M16**	**M12**	**M16**
Internal threaded anchor FIS E			-		-		**M6** / **11x85**	**M8**	-	-		**M10** / **15x85**	**M12**	-	-		-	
Perforated sleeve FIS H K			**12x50**		**12x85**		**16x85**			**16x130**		**20x85**			**20x130**		**20x200**	
Group factors	$\alpha_{g,N}$ (s_{min} ∥)	[-]	1,9															
	$\alpha_{g,V}$ (s_{min} ∥)	[-]	0,9															
	$\alpha_{g,N}$ (s_{min} ⊥)	[-]	1,0															
	$\alpha_{g,V}$ (s_{min} ⊥)	[-]	0,7															

fischer injection system FIS V Plus for masonry

Performance
Vertical perforated brick HLz, FZ 7, filled with mineral wool;
dimensions, installation parameters

Annex C 48

Vertical perforated brick HLz, FZ 7, filled with mineral wool, EN 771-1:2011+A1:2015

Table C49.1: Installation parameters
(Push through anchorage with perforated sleeve FIS H K)

Anchor rod			**M10**	**M12**	**M16**
Perforated sleeve FIS H K			**18x130/200**		**22x130/200**
Anchor rod with perforated sleeve FIS H K					
Max. installation torque	T_{inst}	[Nm]	5		
General installation parameters					
Edge distance	$c_{min} = c_{cr}$	[mm]	60		
Spacing	s_{min} II	[mm]	80		
	s_{cr} II	[mm]	250		
	s_{min} ⊥	[mm]	80		
	s_{cr} ⊥	[mm]	250		
Drilling method					
Rotary drilling with carbide drill					

Table C49.2: Group factors

Anchor rod			**M10**	**M12**	**M16**
Perforated sleeve FIS H K			**18x130/200**		**22x130/200**
Group factors	$\alpha_{g,N}$ (s_{min} II)	[-]	1,9		
	$\alpha_{g,V}$ (s_{min} II)	[-]	0,9		
	$\alpha_{g,N}$ (s_{min} ⊥)	[-]	1,0		
	$\alpha_{g,V}$ (s_{min} ⊥)	[-]	0,7		

Vertical perforated brick HLz, FZ 7, filled with mineral wool, EN 771-1:2011+A1:2015

Table C50.1: Characteristic resistance to pull-out failure or brick breakout failure of a single anchor under tension loading (Pre-positioned anchorage)

Anchor rod		**M6**	**M8**	**M6**	**M8**	**-**	**M8**	**M10**	**M8**	**M10**	**-**	**M12**	**M16**	**M12**	**M16**	**M12**	**M16**
Internal threaded anchor FIS E		**-**		**-**		**M6**	**M8**	**-**	**-**		**M10**	**M12**	**-**	**-**		**-**	
						11x85					**15x85**						
Perforated sleeve FIS H K		**12x50**		**12x85**		**16x85**			**16x130**		**20x85**			**20x130**		**20x200**	
Tension resistance $N_{Rk} = N_{Rk,p} = N_{Rk,b} = N_{Rk,p,c} = N_{Rk,b,c}$ [kN] depending on the mean compressive strength f_b; Installation and use condition w/w, w/d, d/d; (temperature range 50/80°C) [2)]																	
Mean compressive strength / Min. compressive strength single brick [1)]	Use con-ditions																
5 / 4 N/mm²	w/w w/d	0,60		0,75		1,50			2,00		1,20			2,00		2,00	
	d/d	0,60		0,90		1,50			2,00		1,50			2,00		2,50	
7,5 / 6 N/mm²	w/w w/d	0,75		0,90		1,50			2,00		1,50			2,50		2,50	
	d/d	0,90		0,90		2,00			2,50		2,00			2,50		3,00	
10 / 8 N/mm²	w/w w/d	0,90		1,20		2,00			2,50		2,00			2,50		3,00	
	d/d	0,90		1,20		2,00			3,00		2,00			3,00		3,50	

1) The compressive strength of the single brick must not be less than 80% of the mean compressive strength.
2) For temperature range 72/120°C: $N_{Rk\,(72/120°C)} = 0{,}83 \cdot N_{Rk\,(50/80°C)}$.

Table C50.2: Characteristic resistance to pull-out failure or brick breakout failure of a single anchor under tension loading (Push through anchorage)

Anchor rod		**M10**	**M12**	**M16**
Perforated sleeve FIS H K		**18x130/200**		**22x130/200**
Tension resistance $N_{Rk} = N_{Rk,p} = N_{Rk,b} = N_{Rk,p,c} = N_{Rk,b,c}$ [kN] depending on the mean compressive strength f_b; Installation and use condition w/w, w/d, d/d; (temperature range 50/80°C) [2)]				
Mean compressive strength / Min. compressive strength single brick [1)]	Use con-ditions			
5 / 4 N/mm²	w/w w/d	2,0		2,0
	d/d	2,0		2,0
7,5 / 6 N/mm²	w/w w/d	2,0		2,5
	d/d	2,5		2,5
10 / 8 N/mm²	w/w w/d	2,5		2,5
	d/d	3,0		3,0

1) The compressive strength of the single brick must not be less than 80% of the mean compressive strength.
2) For temperature range 72/120°C: $N_{Rk\,(72/120°C)} = 0{,}83 \cdot N_{Rk\,(50/80°C)}$.

Factor for job site tests and displacements see annex C 123.

fischer injection system FIS V Plus for masonry	**Annex C 50**
Performance Vertical perforated brick HLz, FZ 7, filled with mineral wool; Characteristic resistance under tension loading	

Vertical perforated brick HLz, FZ 7, filled with mineral wool, EN 771-1:2011+A1:2015

Table C51.1: Characteristic resistance to local brick failure or brick edge failure of a single anchor under shear loading (Pre-positioned anchorage)

Anchor rod	**M6**	**M8**	**M6**	**M8**	**-**	**M8**	**M10**	**M8**	**M10**	**-**	**M12**	**M16**	**M12**	**M16**	**M12**	**M16**
Internal threaded anchor FIS E	**-**		**-**		**M6** / **11x85**	**M8**	**-**	**-**		**M10** / **15x85**	**M12**	**-**	**-**		**-**	
Perforated sleeve FIS H K	**12x50**		**12x85**		**16x85**			**16x130**		**20x85**			**20x130**		**20x200**	

Shear resistance $V_{Rk} = V_{Rk,b} = V_{Rk,c,II} = V_{Rk,c,\perp}$ [kN] depending on the mean compressive strength f_b; Installation and use condition w/w, w/d, d/d; (temperature range 50/80°C and 72/120°C)

Mean compressive strength / Min. compressive strength single brick [1]	Use con-ditions			
5 / 4 N/mm²	w/w, w/d	1,2	1,5	1,5
	d/d			
7,5 / 6 N/mm²	w/w, w/d	1,5	2,0	1,5
	d/d			
10 / 8 N/mm²	w/w, w/d	1,5	2,5	2,0
	d/d			

[1] The compressive strength of the single brick must not be less than 80% of the mean compressive strength.

Table C51.2: Characteristic resistance to local brick failure or brick edge failure of a single anchor under shear loading (Push through anchorage)

Anchor rod	**M10**	**M12**	**M16**
Perforated sleeve FIS H K	**18x130/200**		**22x130/200**

Shear resistance $V_{Rk} = V_{Rk,b} = V_{Rk,c,II} = V_{Rk,c,\perp}$ [kN] depending on the mean compressive strength f_b; Installation and use condition w/w, w/d, d/d; (temperature range 50/80°C and 72/120°C)

Mean compressive strength / Min. compressive strength single brick [1]	Use con-ditions	
5 / 4 N/mm²	w/w, w/d	1,5
	d/d	
7,5 / 6 N/mm²	w/w, w/d	2,0
	d/d	
10 / 8 N/mm²	w/w, w/d	2,5
	d/d	

[1] The compressive strength of the single brick must not be less than 80% of the mean compressive strength.

Factor for job site tests and displacements see annex C123.

Vertical perforated brick HLz, EN 771-1:2011+A1:2015

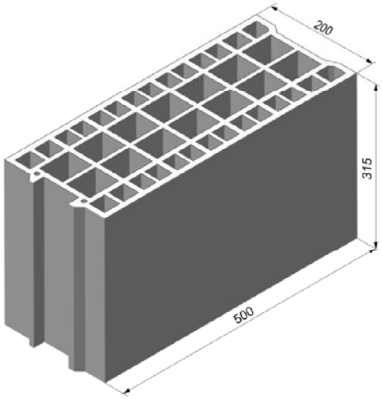

Producer		e.g. Bouyer Leroux		
Nominal dimensions	[mm]	length L	width W	height H
		500	200	315
Mean gross dry density ρ	[kg/dm³]	≥ 0,6		
Mean compressive strength / Min. compressive strength single brick [1)]	[N/mm²]	5 / 4 or 7,5 / 6 or 10 / 8		
Standard or annex		EN 771-1:2011+A1:2015		

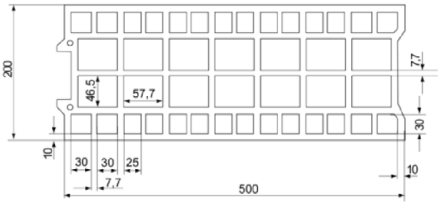

Dimension see also Annex B 16

Table C52.1: Installation parameters
(Pre-positioned anchorage with perforated sleeve FIS H K)

Anchor rod	**M6**	**M8**	**M6**	**M8**	**-**		**M8**	**M10**	**M8**	**M10**	**-**		**M12**	**M16**	**M12**	**M16**
Internal threaded anchor FIS E	**-**		**-**		**M6**	**M8**	**-**		**-**		**M10**	**M12**	**-**		**-**	
					11x85						**15x85**					
Perforated sleeve FIS H K	**12x50**		**12x85**		**16x85**				**16x130**		**20x85**				**20x130**	
Anchor rod and internal threaded anchor FIS E with perforated sleeve FIS H K																
Max. installation torque max T_{inst}	[Nm]	2														
General installation parameters																
Edge distance $c_{min} = c_{cr}$	[mm]	120														
Spacing s_{min} ll	[mm]	120														
Spacing s_{cr} ll	[mm]	500														
Spacing s_{min} ⊥ = s_{cr} ⊥	[mm]	315														
Drilling method																
Hammer drilling with hard metal hammer drill																

[1)] The compressive strength of the single brick must not be less than 80% of the mean compressive strength.

Table C52.2: Group factors

Anchor rod	**M6**	**M8**	**M6**	**M8**	**-**		**M8**	**M10**	**M8**	**M10**	**-**		**M12**	**M16**	**M12**	**M16**
Internal threaded anchor FIS E	**-**		**-**		**M6**	**M8**	**-**		**-**		**M10**	**M12**	**-**		**-**	
					11x85						**15x85**					
Perforated sleeve FIS H K	**12x50**		**12x85**		**16x85**				**16x130**		**20x85**				**20x130**	
Group factors $\alpha_{g,N}$ (s_{min} ll)	[-]	1,3														
Group factors $\alpha_{g,V}$ (s_{min} ll)	[-]	1,7														
Group factors $\alpha_{g,N}$ (s_{min} ⊥)	[-]	2,0														
Group factors $\alpha_{g,V}$ (s_{min} ⊥)	[-]	2,0														

fischer injection system FIS V Plus for masonry

Performance
Vertical perforated brick HLz, dimensions, installation parameters

Annex C 52

Vertical perforated brick HLz, EN 771-1:2011+A1:2015

Table C53.1: Installation parameters
(Push through anchorage with perforated sleeve FIS H K)

Anchor rod			**M10**	**M12**	**M16**
Perforated sleeve FIS H K			**18x130/200**		**22x130/200**
Anchor rod with perforated sleeve FIS H K					
Max. installation torque	max T_{inst}	[Nm]	2		
General installation parameters					
Edge distance	$c_{min} = c_{cr}$	[mm]	120		
Spacing	s_{min} II	[mm]	120		
	s_{cr} II	[mm]	500		
	$s_{min} \perp = s_{cr} \perp$	[mm]	315		
Drilling method					
Hammer drilling with hard metal hammer drill					

Table C53.2: Group factors

Anchor rod			**M10**	**M12**	**M16**
Perforated sleeve FIS H K			**18x130/200**		**22x130/200**
Group factors	$\alpha_{g,N}$ (s_{min} II)	[-]	1,3		
	$\alpha_{g,V}$ (s_{min} II)	[-]	1,7		
	$\alpha_{g,N}$ ($s_{min} \perp$)	[-]	2,0		
	$\alpha_{g,V}$ ($s_{min} \perp$)	[-]			

fischer injection system FIS V Plus for masonry

Performance
Vertical perforated brick HLz, dimensions, installation parameters

Annex C 53

Vertical perforated brick HLz, EN 771-1:2011+A1:2015

Table C54.1: Characteristic resistance to pull-out failure or brick breakout failure of a single anchor under tension loading (Pre-positioned anchorage)

Anchor rod	**M6**	**M8**	**M6**	**M8**	**-**	**M8**	**M10**	**M8**	**M10**	**-**	**M12**	**M16**	**M12**	**M16**
Internal threaded anchor FIS E	**-**		**-**		**M6 M8**	**-**		**-**		**M10 M12**	**-**		**-**	
					11x85					**15x85**				
Perforated sleeve FIS H K	**12x50**		**12x85**		**16x85**			**16x130**		**20x85**			**20x130**	
Tension resistance $N_{Rk} = N_{Rk,p} = N_{Rk,b} = N_{Rk,p,c} = N_{Rk,b,c}$ [kN] depending on the mean compressive strength f_b; Installation and use condition w/w, w/d, d/d; (temperature range 50/80°C) [2)]														
Mean compressive strength / Min. compressive strength single brick [1)]	Use con-ditions													
5 / 4 N/mm²	w/w	w/d	0,50		1,50			0,75		1,50			1,50	
	d/d		0,60		1,50			0,90		1,50			2,00	
7,5 / 6 N/mm²	w/w	w/d	0,75		2,00			1,20		2,00			2,50	
	d/d		0,90		2,50			1,20		2,50			2,50	
10 / 8 N/mm²	w/w	w/d	0,90		3,00			1,50		3,00			3,50	
	d/d		1,20		3,00			2,00		3,00			3,50	

1) The compressive strength of the single brick must not be less than 80% of the mean compressive strength.
2) For temperature range 72/120°C: $N_{Rk\,(72/120°C)} = 0{,}83 \cdot N_{Rk\,(50/80°C)}$.

Table C54.2: Characteristic resistance to pull-out failure or brick breakout failure of a single anchor under tension loading (Push through anchorage)

Anchor rod	**M10**	**M12**	**M16**
Perforated sleeve FIS H K	**18x130/200**		**22x130/200**
Tension resistance $N_{Rk} = N_{Rk,p} = N_{Rk,b} = N_{Rk,p,c} = N_{Rk,b,c}$ [kN] depending on the mean compressive strength f_b; Installation and use condition w/w, w/d, d/d; (temperature range 50/80°C) [2)]			
Mean compressive strength / Min. compressive strength single brick [1)]	Use con-ditions		
5 / 4 N/mm²	w/w w/d	0,75	1,50
	d/d	0,90	2,00
7,5 / 6 N/mm²	w/w w/d	1,20	2,50
	d/d	1,20	2,50
10 / 8 N/mm²	w/w w/d	1,50	3,50
	d/d	2,00	3,50

1) The compressive strength of the single brick must not be less than 80% of the mean compressive strength.
2) For temperature range 72/120°C: $N_{Rk\,(72/120°C)} = 0{,}83 \cdot N_{Rk\,(50/80°C)}$.

Factor for job site tests and displacements see annex C 123.

fischer injection system FIS V Plus for masonry

Performance
Vertical perforated brick HLz, Characteristic resistance under tension loading

Annex C 54

Vertical perforated brick HLz, EN 771-1:2011+A1:2015

Table C55.1: Characteristic resistance to local brick failure or brick edge failure of a single anchor under shear loading (Pre-positioned anchorage)

Anchor rod	**M6**	**M8**	**M6**	**M8**	**-**	**M8**	**M10**	**M8**	**M10**	**-**	**M12**	**M16**	**M12**	**M16**
Internal threaded anchor FIS E	**-**		**-**		**M6 M8**	**-**		**-**		**M10 M12**	**-**		**-**	
					11x85					**15x85**				
Perforated sleeve FIS H K	**12x50**		**12x85**		**16x85**			**16x130**		**20x85**			**20x130**	

Shear resistance $V_{Rk} = V_{Rk,b} = V_{Rk,c,II} = V_{Rk,c,\perp}$ [kN] depending on the mean compressive strength f_b; Installation and use condition w/w, w/d, d/d; (temperature range 50/80°C and 72/120°C)

Mean compressive strength / Min. compressive strength single brick [1]	Use con-ditions											
5 / 4 N/mm²	w/w	w/d	1,5					0,9	1,5		2,5	0,9
	d/d											
7,5 / 6 N/mm²	w/w	w/d	2,5					1,5	2,5		3,5	1,5
	d/d											
10 / 8 N/mm²	w/w	w/d	3,5					2,0	3,5		4,5	2,0
	d/d											

[1] The compressive strength of the single brick must not be less than 80% of the mean compressive strength.

Table C55.2: Characteristic resistance to local brick failure or brick edge failure of a single anchor under shear loading (Push through anchorage)

Anchor rod	**M10**	**M12**	**M16**
Perforated sleeve FIS H K	**18x130/200**		**22x130/200**

Shear resistance $V_{Rk} = V_{Rk,b} = V_{Rk,c,II} = V_{Rk,c,\perp}$ [kN] depending on the mean compressive strength f_b; Installation and use condition w/w, w/d, d/d; (temperature range 50/80°C and 72/120°C)

Mean compressive strength / Min. compressive strength single brick [1]	Use con-ditions		
5 / 4 N/mm²	w/w	w/d	0,9
	d/d		
7,5 / 6 N/mm²	w/w	w/d	1,5
	d/d		
10 / 8 N/mm²	w/w	w/d	2,0
	d/d		

[1] The compressive strength of the single brick must not be less than 80% of the mean compressive strength.

Factor for job site tests and displacements see annex C 123.

Vertical perforated brick HLz, EN 771-1:2011+A1:2015

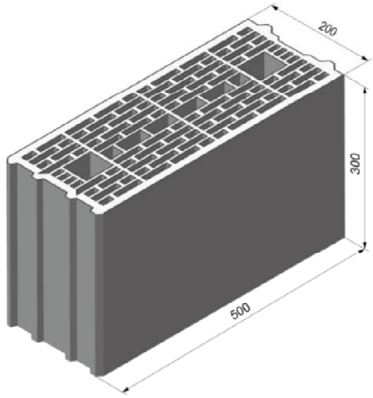

Producer		e.g. Wienerberger		
Nominal dimensions	[mm]	length L	width W	height H
		500	200	300
Mean gross dry density ρ	[kg/dm³]	≥ 0,7		
Mean compressive strength / Min. compressive strength single brick [1)]	[N/mm²]	5 / 4 or 7,5 / 6 or 10 / 8 12,5 / 10		
Standard or annex		EN 771-1:2011+A1:2015		

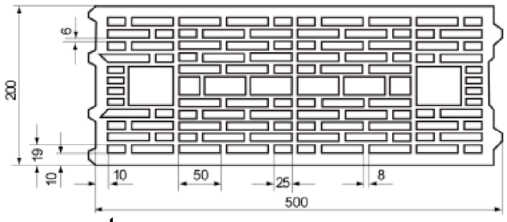

Dimension see also Annex B 17

Table C56.1: Installation parameters
(Pre-positioned anchorage with perforated sleeve FIS H K)

Anchor rod		**M6**	**M8**	**M6**	**M8**	**-**		**M8**	**M10**	**M8**	**M10**	**-**		**M12**	**M16**	**M12**	**M16**
Internal threaded anchor FIS E		**-**		**-**		**M6**	**M8**	**-**		**-**		**M10**	**M12**	**-**		**-**	
						11x85						**15x85**					
Perforated sleeve FIS H K		**12x50**		**12x85**		**16x85**				**16x130**		**20x85**				**20x130**	
Anchor rod and internal threaded anchor FIS E with perforated sleeve FIS H K																	
Max. installation torque	max T_{inst}	[Nm]	2														
General installation parameters																	
Edge distance	$c_{min} = c_{cr}$	[mm]	50							80				50		80	
Spacing	s_{min} ∥	[mm]	100														
	s_{cr} ∥	[mm]	500														
	s_{min} ⊥ = s_{cr} ⊥	[mm]	300														
Drilling method																	
Hammer drilling with hard metal hammer drill																	

[1)] The compressive strength of the single brick must not be less than 80% of the mean compressive strength.

Table C56.2: Group factors

Anchor rod		**M6**	**M8**	**M6**	**M8**	**-**		**M8**	**M10**	**M8**	**M10**	**-**		**M12**	**M16**	**M12**	**M16**
Internal threaded anchor FIS E		**-**		**-**		**M6**	**M8**	**-**		**-**		**M10**	**M12**	**-**		**-**	
						11x85						**15x85**					
Perforated sleeve FIS H K		**12x50**		**12x85**		**16x85**				**16x130**		**20x85**				**20x130**	
Group factors	$\alpha_{g,N}$ (s_{min} ∥)	[-]	1,4														
	$\alpha_{g,V}$ (s_{min} ∥)	[-]	2														
	$\alpha_{g,N}$ (s_{min} ⊥)	[-]	2														
	$\alpha_{g,V}$ (s_{min} ⊥)	[-]	2														

fischer injection system FIS V Plus for masonry

Performance
Vertical perforated brick HLz, dimensions, installation parameters

Annex C 56

Vertical perforated brick HLz, EN 771-1:2011+A1:2015

Table C57.1: Installation parameters
(Push through anchorage with perforated sleeve FIS H K)

Anchor rod			**M10**	**M12**	**M16**
Perforated sleeve FIS H K			**18x130/200**		**22x130/200**
Anchor rod with perforated sleeve FIS H K					
Max. installation torque	max T_{inst}	[Nm]	2		
General installation parameters					
Edge distance	$c_{min} = c_{cr}$	[mm]	80		
Spacing	s_{min} II	[mm]	100		
	s_{cr} II	[mm]	500		
	$s_{min} \perp = s_{cr} \perp$	[mm]	300		
Drilling method					
Hammer drilling with hard metal hammer drill					

Table C57.2: Group factors

Anchor rod			**M10**	**M12**	**M16**
Perforated sleeve FIS H K			**18x130/200**		**22x130/200**
Group factors	$\alpha_{g,N}$ (s_{min} II)	[-]	1,4		
	$\alpha_{g,V}$ (s_{min} II)	[-]	2		
	$\alpha_{g,N}$ ($s_{min} \perp$)	[-]	2		
	$\alpha_{g,V}$ ($s_{min} \perp$)	[-]	2		

fischer injection system FIS V Plus for masonry

Performance
Vertical perforated brick HLz, dimensions, installation parameters

Annex C 57

Vertical perforated brick HLz, EN 771-1:2011+A1:2015

Table C58.1: Characteristic resistance to pull-out failure or brick breakout failure of a single anchor under tension loading (Pre-positioned anchorage)

Anchor rod	**M6**	**M8**	**M6**	**M8**	**-**	**M8**	**M10**	**M8**	**M10**	**-**	**M12**	**M16**	**M12**	**M16**
Internal threaded anchor FIS E	**-**		**-**		**M6 M8**	**-**		**-**		**M10 M12**	**-**		**-**	
					11x85					**15x85**				
Perforated sleeve FIS H K	**12x50**		**12x85**		**16x85**			**16x130**		**20x85**			**20x130**	
Tension resistance $N_{Rk} = N_{Rk,p} = N_{Rk,b} = N_{Rk,p,c} = N_{Rk,b,c}$ [kN] depending on the mean compressive strength f_b; Installation and use condition w/w, w/d, d/d; (temperature range 50/80°C) [2)]														
Mean compressive strength / Min. compressive strength single brick [1)]	Use con-ditions													
5 / 4 N/mm²	w/w	w/d	0,50		0,60			1,20		0,75			1,50	
	d/d		0,60		0,75			1,20		0,90			1,50	
7,5 / 6 N/mm²	w/w	w/d	0,75		0,90			1,50		1,20			2,00	
	d/d		0,90		1,20			2,00		1,20			2,50	
10 / 8 N/mm²	w/w	w/d	0,90		1,20			2,00		1,50			2,50	
	d/d		1,20		1,50			2,50		1,50			3,00	
12,5 / 10 N/mm²	w/w	w/d	1,20		1,50			2,50		2,00			3,50	
	d/d		1,50		2,00			3,00		2,00			4,00	

1) The compressive strength of the single brick must not be less than 80% of the mean compressive strength.
2) For temperature range 72/120°C: $N_{Rk\,(72/120°C)} = 0{,}83 \cdot N_{Rk\,(50/80°C)}$.

Table C58.2: Characteristic resistance to pull-out failure or brick breakout failure of a single anchor under tension loading (Push through anchorage)

Anchor rod	**M10**	**M12**	**M16**
Perforated sleeve FIS H K	**18x130/200**		**22x130/200**
Tension resistance $N_{Rk} = N_{Rk,p} = N_{Rk,b} = N_{Rk,p,c} = N_{Rk,b,c}$ [kN] depending on the mean compressive strength f_b; Installation and use condition w/w, w/d, d/d; (temperature range 50/80°C) [2)]			
Mean compressive strength / Min. compressive strength single brick [1)]	Use con-ditions		
5 / 4 N/mm²	w/w w/d	1,2	1,5
	d/d	1,2	1,5
7,5 / 6 N/mm²	w/w w/d	1,5	2,0
	d/d	2,0	2,5
10 / 8 N/mm²	w/w w/d	2,0	2,5
	d/d	2,5	3,0
12,5 / 10 N/mm²	w/w w/d	2,5	3,5
	d/d	3,0	4,0

1) The compressive strength of the single brick must not be less than 80% of the mean compressive strength.
2) For temperature range 72/120°C: $N_{Rk\,(72/120°C)} = 0{,}83 \cdot N_{Rk\,(50/80°C)}$.

Factor for job site tests and displacements see annex C 123.

fischer injection system FIS V Plus for masonry

Performance
Vertical perforated brick HLz, Characteristic resistance under tension loading

Annex C 58

Vertical perforated brick HLz, EN 771-1:2011+A1:2015

Table C59.1: Characteristic resistance to local brick failure or brick edge failure of a single anchor under shear loading (Pre-positioned anchorage)

Anchor rod	**M6**	**M8**	**M6**	**M8**	**-**		**M8**	**M10**	**M8**	**M10**	**-**		**M12**	**M16**	**M12**	**M16**
Internal threaded anchor FIS E	**-**		**-**		**M6**	**M8**	**-**		**-**		**M10**	**M12**	**-**		**-**	
					11x85						**15x85**					
Perforated sleeve FIS H K	**12x50**		**12x85**		**16x85**				**16x130**		**20x85**				**20x130**	
Shear resistance $V_{Rk} = V_{Rk,b} = V_{Rk,c,II} = V_{Rk,c,\perp}$ [kN] depending on the mean compressive strength f_b; Installation and use condition w/w, w/d, d/d; (temperature range 50/80°C and 72/120°C)																
Mean compressive strength / Min. compressive strength single brick [1]	Use con-ditions															
5 / 4 N/mm²	w/w w/d d/d		0,9		1,2		0,9		1,2		0,6		2,0		0,6	
7,5 / 6 N/mm²	w/w w/d d/d		1,2		1,5		1,2		1,5		0,9		3,0		0,9	
10 / 8 N/mm²	w/w w/d d/d		1,5		2,0		1,5		2,0		1,2		4,0		1,2	
12,5 / 10 N/mm²	w/w w/d d/d		2,0		3,0		2,0		3,0		1,5		5,0		1,5	

[1] The compressive strength of the single brick must not be less than 80% of the mean compressive strength.

Table C59.2: Characteristic resistance to local brick failure or brick edge failure of a single anchor under shear loading (Push through anchorage)

Anchor rod	**M10**	**M12**	**M16**
Perforated sleeve FIS H K	**18x130/200**		**22x130/200**
Shear resistance $V_{Rk} = V_{Rk,b} = V_{Rk,c,II} = V_{Rk,c,\perp}$ [kN] depending on the mean compressive strength f_b; Installation and use condition w/w, w/d, d/d; (temperature range 50/80°C and 72/120°C)			
Mean compressive strength / Min. compressive strength single brick [1]	Use con-ditions		
5 / 4 N/mm²	w/w w/d d/d	0,6	
7,5 / 6 N/mm²	w/w w/d d/d	0,9	
10 / 8 N/mm²	w/w w/d d/d	1,2	
12,5 / 10 N/mm²	w/w w/d d/d	1,5	

[1] The compressive strength of the single brick must not be less than 80% of the mean compressive strength.
Factor for job site tests and displacements see annex C 123.

fischer injection system FIS V Plus for masonry	**Annex C 59**
Performance Vertical perforated brick HLz, Characteristic resistance under shear loading	

Vertical perforated brick HLz, EN 771-1:2011+A1:2015

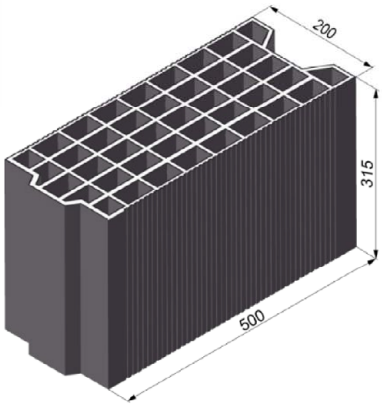

Producer		e.g. Terreal		
Nominal dimensions	[mm]	length L	width W	height H
		500	200	315
Mean gross dry density ρ	[kg/dm³]	≥ 0,7		
Mean compressive strength / Min. compressive strength single brick [1)]	[N/mm²]	2,5 / 2 or 5 / 4 or 7,5 / 6 or 10 / 8		
Standard or annex		EN 771-1:2011+A1:2015		

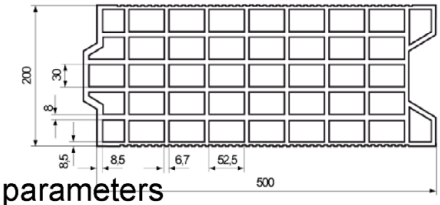

Dimension see also Annex B 17

Table C60.1: Installation parameters
(Pre-positioned anchorage with perforated sleeve FIS H K)

Anchor rod			**M6**	**M8**	**M6**	**M8**	**-**		**M8**	**M10**	**M8**	**M10**	**-**		**M12**	**M16**	**M12**	**M16**
Internal threaded anchor FIS E			**-**		**-**		**M6**	**M8**	**-**		**-**		**M10**	**M12**	**-**		**-**	
							11x85						**15x85**					
Perforated sleeve FIS H K			**12x50**		**12x85**		**16x85**				**16x130**		**20x85**				**20x130**	
Anchor rod and internal threaded anchor FIS E with perforated sleeve FIS H K																		
Max. installation torque	max T_{inst}	[Nm]	2															
General installation parameters																		
Edge distance	$c_{min} = c_{cr}$	[mm]	50								80		50				80	
Spacing	s_{min} ∥	[mm]	100															
	s_{cr} ∥	[mm]	500															
	s_{min} ⊥	[mm]	100															
	s_{cr} ⊥	[mm]	315															
Drilling method																		
Hammer drilling with hard metal hammer drill																		

1) The compressive strength of the single brick must not be less than 80% of the mean compressive strength.

Table C60.2: Group factors

Anchor rod			**M6**	**M8**	**M6**	**M8**	**-**		**M8**	**M10**	**M8**	**M10**	**-**		**M12**	**M16**	**M12**	**M16**
Internal threaded anchor FIS E			**-**		**-**		**M6**	**M8**	**-**		**-**		**M10**	**M12**	**-**		**-**	
							11x85						**15x85**					
Perforated sleeve FIS H K			**12x50**		**12x85**		**16x85**				**16x130**		**20x85**				**20x130**	
Group factors	$\alpha_{g,N}$ (s_{min} ∥)	[-]	1,1															
	$\alpha_{g,V}$ (s_{min} ∥)	[-]	1,2															
	$\alpha_{g,N}$ (s_{min} ⊥)	[-]	1,1															
	$\alpha_{g,V}$ (s_{min} ⊥)	[-]	1,2															

fischer injection system FIS V Plus for masonry

Performance
Vertical perforated brick HLz, dimensions, installation parameters

Annex C 60

Vertical perforated brick HLz, EN 771-1:2011+A1:2015

Table C61.1: Installation parameters
(Push through anchorage with perforated sleeve FIS H K)

Anchor rod			**M10**	**M12**	**M16**
Perforated sleeve FIS H K			**18x130/200**		**22x130/200**
Anchor rod with perforated sleeve FIS H K					
Max. installation torque	max T_{inst}	[Nm]	2		
General installation parameters					
Edge distance	$c_{min} = c_{cr}$	[mm]	80		
Spacing	s_{min} ll		100		
	s_{cr} ll		500		
	s_{min} ⊥		100		
	s_{cr} ⊥		315		
Drilling method					
Hammer drilling with hard metal hammer drill					

Table C61.2: Group factors

Anchor rod			**M10**	**M12**	**M16**
Perforated sleeve FIS H K			**18x130/200**		**22x130/200**
Group factors	$\alpha_{g,N}$ (s_{min} ll)	[-]	1,1		
	$\alpha_{g,V}$ (s_{min} ll)		1,2		
	$\alpha_{g,N}$ (s_{min} ⊥)		1,1		
	$\alpha_{g,V}$ (s_{min} ⊥)		1,2		

Vertical perforated brick HLz, EN 771-1:2011+A1:2015

Table C62.1: Characteristic resistance to pull-out failure or brick breakout failure of a single anchor under tension loading (Pre-positioned anchorage)

Anchor rod	**M6**	**M8**	**M6**	**M8**	**-**	**M8**	**M10**	**M8**	**M10**	**-**	**M12**	**M16**	**M12**	**M16**
Internal threaded anchor FIS E	**-**		**-**		**M6 M8**	**-**		**-**		**M10 M12**	**-**		**-**	
					11x85					**15x85**				
Perforated sleeve FIS H K	**12x50**		**12x85**		**16x85**			**16x130**		**20x85**			**20x130**	

Tension resistance $N_{Rk} = N_{Rk,p} = N_{Rk,b} = N_{Rk,p,c} = N_{Rk,b,c}$ [kN] depending on the mean compressive strength f_b; Installation and use condition w/w, w/d, d/d; (temperature range 50/80°C)[2)]

Mean compressive strength / Min. compressive strength single brick [1)]	Use con-ditions							
2,5 / 2 N/mm²	w/w w/d	0,5						
	d/d	0,5				0,6	0,5	0,6
5 / 4 N/mm²	w/w w/d	0,9						
	d/d	0,9	1,2					
7,5 / 6 N/mm²	w/w w/d	1,5						
	d/d	1,5						
10 / 8 N/mm²	w/w w/d	2,0						
	d/d	2,0						

1) The compressive strength of the single brick must not be less than 80% of the mean compressive strength.
2) For temperature range 72/120°C: $N_{Rk\,(72/120°C)} = 0{,}83 \cdot N_{Rk\,(50/80°C)}$.

Table C62.2: Characteristic resistance to pull-out failure or brick breakout failure of a single anchor under tension loading (Push through anchorage)

Anchor rod	**M10**	**M12**	**M16**
Perforated sleeve FIS H K	**18x130/200**		**22x130/200**

Tension resistance $N_{Rk} = N_{Rk,p} = N_{Rk,b} = N_{Rk,p,c} = N_{Rk,b,c}$ [kN] depending on the mean compressive strength f_b; Installation and use condition w/w, w/d, d/d; (temperature range 50/80°C)[2)]

Mean compressive strength / Min. compressive strength single brick [1)]	Use con-ditions	
2,5 / 2 N/mm²	w/w w/d	0,5
	d/d	0,6
5 / 4 N/mm²	w/w w/d	0,9
	d/d	1,2
7,5 / 6 N/mm²	w/w w/d	1,5
	d/d	1,5
10 / 8 N/mm²	w/w w/d	2,0
	d/d	2,0

1) The compressive strength of the single brick must not be less than 80% of the mean compressive strength.
2) For temperature range 72/120°C: $N_{Rk\,(72/120°C)} = 0{,}83 \cdot N_{Rk\,(50/80°C)}$.

Factor for job site tests and displacements see annex C 123.

fischer injection system FIS V Plus for masonry

Performance
Vertical perforated brick HLz, Characteristic resistance under tension loading

Annex C 62

Vertical perforated brick HLz, EN 771-1:2011+A1:2015

Table C63.1: Characteristic resistance to local brick failure or brick edge failure of a single anchor under shear loading (Pre-positioned anchorage)

Anchor rod	**M6**	**M8**	**M6**	**M8**	**-**	**M8**	**M10**	**M8**	**M10**	**-**	**M12**	**M16**	**M12**	**M16**
Internal threaded anchor FIS E	**-**		**-**		**M6 M8**	**-**		**-**		**M10 M12**	**-**		**-**	
					11x85					**15x85**				
Perforated sleeve FIS H K	**12x50**		**12x85**		**16x85**			**16x130**		**20x85**			**20x130**	
Shear resistance $V_{Rk} = V_{Rk,b} = V_{Rk,c,II} = V_{Rk,c,\perp}$ [kN] depending on the mean compressive strength f_b; Installation and use condition w/w, w/d, d/d; (temperature range 50/80°C and 72/120°C)														
Mean compressive strength / Min. compressive strength single brick [1]	Use con-ditions													
2,5 / 2 N/mm²	w/w w/d d/d		0,30	0,60	0,3	0,60		0,60		0,90			0,75	
5 / 4 N/mm²	w/w w/d d/d		0,75	1,20	0,7	1,20		1,20		2,00			1,50	
7,5 / 6 N/mm²	w/w w/d d/d		0,90	2,00	0,9	2,00		1,50		3,00			2,00	
10 / 8 N/mm²	w/w w/d d/d		1,50	2,50	1,5	2,50		2,00		4,00			3,00	

[1] The compressive strength of the single brick must not be less than 80% of the mean compressive strength.

Table C63.2: Characteristic resistance to local brick failure or brick edge failure of a single anchor under shear loading (Push through anchorage)

Anchor rod	**M10**	**M12**	**M16**
Perforated sleeve FIS H K	**18x130/200**		**22x130/200**
Shear resistance $V_{Rk} = V_{Rk,b} = V_{Rk,c,II} = V_{Rk,c,\perp}$ [kN] depending on the mean compressive strength f_b; Installation and use condition w/w, w/d, d/d; (temperature range 50/80°C and 72/120°C)			
Mean compressive strength / Min. compressive strength single brick [1]	Use con-ditions		
2,5 / 2 N/mm²	w/w w/d d/d	0,60	0,75
5 / 4 N/mm²	w/w w/d d/d	1,20	1,50
7,5 / 6 N/mm²	w/w w/d d/d	1,50	2,00
10 / 8 N/mm²	w/w w/d d/d	2,00	3,00

[1] The compressive strength of the single brick must not be less than 80% of the mean compressive strength.
Factor for job site tests and displacements see annex C 123.

Vertical perforated brick HLz, EN 771-1:2011+A1:2015

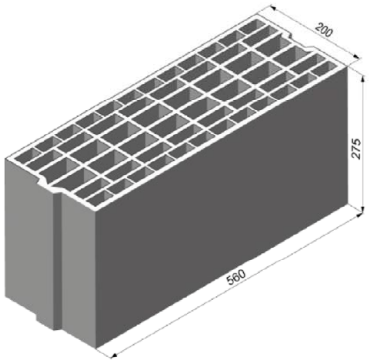

Producer		e.g. Imery		
Nominal dimensions	[mm]	length L	width W	height H
		560	200	275
Mean gross dry density ρ	[kg/dm³]	≥ 0,7		
Mean compressive strength / Min. compressive strength single brick [1)]	[N/mm²]	5 / 4 or 8 / 6 or 10 / 8		
Standard or annex		EN 771-1:2011+A1:2015		

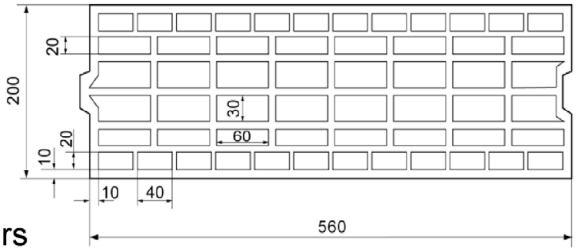

Dimension see also Annex B 17

Table C64.1: Installation parameters

Anchor rod			M8	M10	M10	M12	M12	M16	M16
Perforated sleeve FIS H K			**16x130**		**18x130/200**		**20x130**		**22x130/200**
Anchor rod with perforated sleeve FIS H K									
Max. installation torque	max T_{inst}	[Nm]	2						
General installation parameters									
Edge distance	$c_{min} = c_{cr}$	[mm]	80						
Spacing	s_{min} II = s_{cr} II	[mm]	560						
	s_{min} ⊥ = s_{cr} ⊥	[mm]	275						
Drilling method									
Hammer drilling with hard metal hammer drill									

1) The compressive strength of the single brick must not be less than 80% of the mean compressive strength.

Table C64.2: Group factors

Anchor rod			M8	M10	M10	M12	M12	M16	M16
Perforated sleeve FIS H K			**16x130**		**18x130/200**		**20x130**		**22x130/200**
Group factors	$\alpha_{g,N}$ (s_{min} II)	[-]	2						
	$\alpha_{g,V}$ (s_{min} II)	[-]	2						
	$\alpha_{g,N}$ (s_{min} ⊥)	[-]	2						
	$\alpha_{g,V}$ (s_{min} ⊥)	[-]	2						

fischer injection system FIS V Plus for masonry

Performance
Vertical perforated brick HLz, dimensions, installation parameters

Annex C 64

Vertical perforated brick HLz, EN 771-1:2011+A1:2015

Table C65.1: Characteristic resistance to pull-out failure or brick breakout failure of a single anchor under tension loading

Anchor rod		**M8**	**M10**	**M10**	**M12**	**M12**	**M16**	**M16**
Perforated sleeve FIS H K		**16x130**		**18x130/200**		**20x130**		**22x130/200**
Tension resistance $N_{Rk} = N_{Rk,p} = N_{Rk,b} = N_{Rk,p,c} = N_{Rk,b,c}$ [kN] depending on the mean compressive strength f_b; Installation and use condition w/w, w/d, d/d; (temperature range 50/80°C) [2)]								
Mean compressive strength / Min. compressive strength single brick [1)]	Use con-ditions							
5 / 4 N/mm²	w/w w/d	0,9				1,2		
	d/d	1,2				1,5		
8 / 6 N/mm²	w/w w/d	1,5				2,0		
	d/d	1,5				2,0		
10 / 8 N/mm²	w/w w/d	2,0				2,5		
	d/d	2,5				3,0		

1) The compressive strength of the single brick must not be less than 80% of the mean compressive strength.
2) For temperature range 72/120°C: $N_{Rk\,(72/120°C)} = 0{,}83 \cdot N_{Rk\,(50/80°C)}$.

Table C65.2: Characteristic resistance to local brick failure or brick edge failure of a single anchor under shear loading

Anchor rod		**M8**	**M10**	**M10**	**M12**	**M12**	**M16**	**M16**
Perforated sleeve FIS H K		**16x130**		**18x130/200**		**20x130**		**22x130/200**
Shear resistance $V_{Rk} = V_{Rk,b} = V_{Rk,c,II} = V_{Rk,c,\perp}$ [kN] depending on the mean compressive strength f_b; Installation and use condition w/w, w/d, d/d; (temperature range 50/80°C and 72/120°C)								
Mean compressive strength / Min. compressive strength single brick [1)]	Use con-ditions							
5 / 4 N/mm²	w/w w/d	0,9						
	d/d							
8 / 6 N/mm²	w/w w/d	1,5						
	d/d							
10 / 8 N/mm²	w/w w/d	2,0						
	d/d							

1) The compressive strength of the single brick must not be less than 80% of the mean compressive strength.
Factor for job site tests and displacements see annex C 123.

Vertical perforated brick HLz, EN 771-1:2011+A1:2015

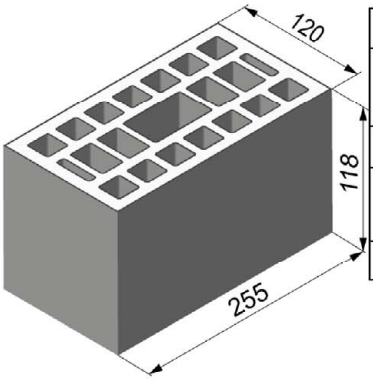

Producer		e.g. Wienerberger		
Nominal dimensions	[mm]	length L	width W	height H
		255	120	118
Mean gross dry density ρ	[kg/dm³]	≥ 1,0		
Mean compressive strength / Min. compressive strength single brick [1)]	[N/mm²]	2,5 / 2 or 5 / 4 or 8 / 6 or 10 / 8 or 12,5 / 10 / or 15 / 12		
Standard or annex		EN 771-1:2011+A1:2015		

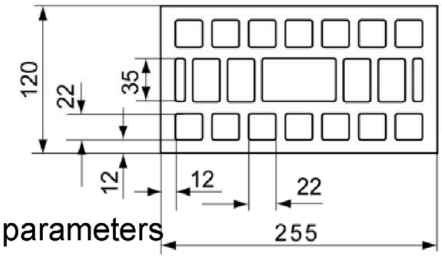

Dimension see also Annex B 18

Table C66.1: Installation parameters

Anchor rod	M6	M8	M6	M8	-		M8	M10	-		M12	M16
Internal threaded anchor FIS E	-		-		M6	M8	-		M10	M12	-	
					11x85				15x85			
Perforated sleeve FIS H K	12x50		12x85		16x85				20x85			

Anchor rod and internal threaded anchor FIS E with perforated sleeve FIS H K			
Max. installation torque	max T_{inst}	[Nm]	2
General installation parameters			
Edge distance	$c_{min} = c_{cr}$	[mm]	60
Spacing	s_{cr} ∥ = s_{min} ∥	[mm]	255
	s_{cr} ⊥ = s_{min} ⊥	[mm]	120
Drilling method			
Hammer drilling with hard metal hammer drill			

[1)] The compressive strength of the single brick must not be less than 80% of the mean compressive strength.

Table C66.2: Group factors

Anchor rod	M6	M8	M6	M8	-		M8	M10	-		M12	M16
Internal threaded anchor FIS E	-		-		M6	M8	-		M10	M12	-	
					11x85				15x85			
Perforated sleeve FIS H K	12x50		12x85		16x85				20x85			
Group factors	$\alpha_{g,N}$ (s_{min} ∥)											
	$\alpha_{g,V}$ (s_{min} ∥)											
	$\alpha_{g,N}$ (s_{min} ⊥)											
	$\alpha_{g,V}$ (s_{min} ⊥)	[-]										
					2							

fischer injection system FIS V Plus for masonry

Performance
Vertical perforated brick HLz, dimensions, installation parameters

Annex C 66

Vertical perforated brick HLz, EN 771-1:2011+A1:2015

Table C67.1: Characteristic resistance to pull-out failure or brick breakout failure of a single anchor under tension loading

Anchor rod	**M6**	**M8**	**M6**	**M8**	**-**		**M8**	**M10**	**-**		**M12**	**M16**
Internal threaded anchor FIS E	**-**		**-**		**M6**	**M8**	**-**		**M10**	**M12**	**-**	
					11x85				**15x85**			
Perforated sleeve FIS H K	**12x50**		**12x85**		**16x85**				**20x85**			

Tension resistance $N_{Rk} = N_{Rk,p} = N_{Rk,b} = N_{Rk,p,c} = N_{Rk,b,c}$ [kN] depending on the mean compressive strength f_b; Installation and use condition w/w, w/d, d/d; (temperature range 50/80°C) [1]

Mean compressive strength / Min. compressive strength single brick [2]	Use con-ditions				
2,5 / 2 N/mm²	w/w	w/d	0,40	0,50	-[3]
	d/d		0,50	0,50	-[3]
5 / 4 N/mm²	w/w	w/d	0,90	0,90	0,50
	d/d		0,90	1,20	0,50
8 / 6 N/mm²	w/w	w/d	1,20	1,50	0,75
	d/d		1,50	1,50	0,75
10 / 8 N/mm²	w/w	w/d	1,50	2,00	0,90
	d/d		2,00	2,00	0,90
12,5 / 10 N/mm²	w/w	w/d	2,00	2,50	1,20
	d/d		2,50	2,50	1,20
15 / 12 N/mm²	w/w	w/d	2,50	3,00	1,50
	d/d		3,00	3,50	1,50

1) For temperature range 72/120°C: $N_{Rk\,(72/120°C)} = 0{,}83 \cdot N_{Rk\,(50/80°C)}$.
2) The compressive strength of the single brick must not be less than 80% of the mean compressive strength.
3) No performance assessed

Factor for job site tests and displacements see annex C 123.

Vertical perforated brick HLz, EN 771-1:2011+A1:2015

Table C68.1: Characteristic resistance to local brick failure or brick edge failure of a single anchor under shear loading

Anchor rod		**M6**	**M8**	**M6**	**M8**	**-**		**M8**	**M10**	**-**		**M12**	**M16**
Internal threaded anchor FIS E		**-**		**-**		**M6**	**M8**	**-**		**M10**	**M12**	**-**	
						11x85				**15x85**			
Perforated sleeve FIS H K		**12x50**		**12x85**		**16x85**				**20x85**			
Shear resistance $V_{Rk} = V_{Rk,b} = V_{Rk,c,II} = V_{Rk,c,\perp}$ [kN] depending on the mean compressive strength f_b; Installation and use condition w/w, w/d, d/d; (temperature range 50/80°C and 72/120°C)													
Mean compressive strength / Min. compressive strength single brick [1]	Use con-dition												
2,5 / 2 N/mm²	w/w w/d d/d	0,60	0,75	0,60	0,75	0,90							
5 / 4 N/mm²	w/w w/d d/d	1,20	1,50	1,20	1,50	2,00							
8 / 6 N/mm²	w/w w/d d/d	2,00	2,00	2,00	2,00	2,50							
10 / 8 N/mm²	w/w w/d d/d	2,50	3,00	2,50	3,00	3,50							
12,5 / 10 N/mm²	w/w w/d d/d	3,00	3,50	3,00	3,50	4,50							
15 / 12 N/mm²	w/w w/d d/d	4,00	4,50	4,00	4,50	5,50							

[1] The compressive strength of the single brick must not be less than 80% of the mean compressive strength.

Factor for job site tests and displacements see annex C 123.

Vertical perforated brick HLz, EN 771-1:2011+A1:2015

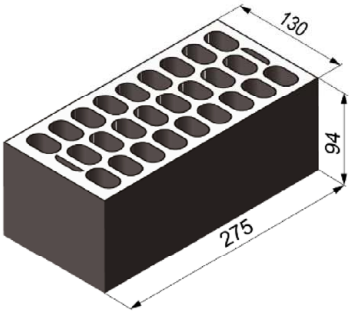

Producer		e.g. Cermanica Farreny S.A.		
Nominal dimensions	[mm]	length L	width W	height H
		275	130	94
Mean gross dry density ρ	[kg/dm³]	≥ 0,8		
Mean compressive strength / Min. compressive strength single brick [1)]	[N/mm²]	7,5 / 6 or 10 / 8 or 15 / 12 or 20 / 16 or 25 / 20		
Standard or annex		EN 771-1:2011+A1:2015		

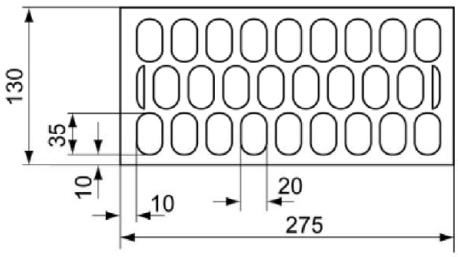

Dimension see also Annex B 18

Table C69.1: Installation parameters

Anchor rod		**M6**	**M8**	**M6**	**M8**	**-**		**M8**	**M10**	**-**		**M12**	**M16**
Internal threaded anchor FIS E		**-**		**-**		**M6**	**M8**	**-**		**M10**	**M12**	**-**	
						11x85				**15x85**			
Perforated sleeve FIS H K		**12x50**		**12x85**		**16x85**				**20x85**			
Anchor rod and internal threaded anchor FIS E with perforated sleeve FIS H K													
Max. installation torque	max T_{inst}	[Nm]	2										
General installation parameters													
Edge distance	$c_{min} = c_{cr}$	[mm]	100							120			
Spacing	s_{cr} ∥ = s_{min} ∥	[mm]	275										
	s_{cr} ⊥ = s_{min} ⊥	[mm]	95										
Drilling method													
Hammer drilling with hard metal hammer drill													

1) The compressive strength of the single brick must not be less than 80% of the mean compressive strength.

Table C69.2: Group factors

Anchor rod		**M6**	**M8**	**M6**	**M8**	**-**		**M8**	**M10**	**-**		**M12**	**M16**
Internal threaded anchor FIS E		**-**		**-**		**M6**	**M8**	**-**		**M10**	**M12**	**-**	
						11x85				**15x85**			
Perforated sleeve FIS H K		**12x50**		**12x85**		**16x85**				**20x85**			
Group factors	$\alpha_{g,N}$ (s_{min} ∥)	[-]	2										
	$\alpha_{g,V}$ (s_{min} ∥)	[-]	2										
	$\alpha_{g,N}$ (s_{min} ⊥)	[-]	2										
	$\alpha_{g,V}$ (s_{min} ⊥)	[-]	2										

fischer injection system FIS V Plus for masonry

Performance
Vertical perforated brick HLz, dimensions, installation parameters

Annex C 69

Vertical perforated brick HLz, EN 771-1:2011+A1:2015

Table C70.1: Characteristic resistance to pull-out failure or brick breakout failure of a single anchor under tension loading

Anchor rod	**M6**	**M8**	**M6**	**M8**	**-**		**M8**	**M10**	**-**		**M12**	**M16**
Internal threaded anchor FIS E	**-**		**-**		**M6**	**M8**	**-**		**M10**	**M12**	**-**	
					11x85				**15x85**			
Perforated sleeve FIS H K	**12x50**		**12x85**		**16x85**				**20x85**			

Tension resistance $N_{Rk} = N_{Rk,p} = N_{Rk,b} = N_{Rk,p,c} = N_{Rk,b,c}$ [kN] depending on the mean compressive strength f_b; Installation and use condition w/w, w/d, d/d; (temperature range 50/80°C) [2]

Mean compressive strength / Min. compressive strength single brick [1]	Use con-ditions			
7,5 / 6 N/mm²	w/w	w/d	0,40	0,90
	d/d		0,40	0,90
10 / 8 N/mm²	w/w	w/d	0,50	1,20
	d/d		0,60	1,20
15 / 12 N/mm²	w/w	w/d	0,75	1,50
	d/d		0,90	2,00
20 / 16 N/mm²	w/w	w/d	0,90	2,00
	d/d		1,20	2,50
25 / 20 N/mm²	w/w	w/d	1,20	3,00
	d/d		1,50	3,00

1) The compressive strength of the single brick must not be less than 80% of the mean compressive strength.
2) For temperature range 72/120°C: $N_{Rk\,(72/120°C)} = 0{,}83 \cdot N_{Rk\,(50/80°C)}$.

fischer injection system FIS V Plus for masonry

Performance
Vertical perforated brick HLz, Characteristic resistance under tension loading

Annex C 70

Vertical perforated brick HLz, EN 771-1:2011+A1:2015

Table C71.2: Characteristic resistance to local brick failure or brick edge failure of a single anchor under shear loading

Anchor rod	**M6**	**M8**	**M6**	**M8**	**-**		**M8**	**M10**	**-**		**M12**	**M16**
Internal threaded anchor FIS E	**-**		**-**		**M6**	**M8**	**-**		**M10**	**M12**	**-**	
					11x85				**15x85**			
Perforated sleeve FIS H K	**12x50**		**12x85**		**16x85**				**20x85**			

Shear resistance $V_{Rk} = V_{Rk,b} = V_{Rk,c,II} = V_{Rk,c,\perp}$ [kN] depending on the mean compressive strength f_b; Installation and use condition w/w, w/d, d/d; (temperature range 50/80°C and 72/120°C)

Mean compressive strength / Min. compressive strength single brick [1]	Use con-ditions		
7,5 / 6 N/mm²	w/w, w/d, d/d	1,2	1,2
10 / 8 N/mm²	w/w, w/d, d/d	1,5	1,5
15 / 12 N/mm²	w/w, w/d, d/d	2,0	2,5
20 / 16 N/mm²	w/w, w/d, d/d	3,0	3,0
25 / 20 N/mm²	w/w, w/d, d/d	4,0	4,0

[1] The compressive strength of the single brick must not be less than 80% of the mean compressive strength.

Factor for job site tests and displacements see annex C 123.

fischer injection system FIS V Plus for masonry

Performance
Vertical perforated brick HLz, Characteristic resistance under tension loading

Annex C 71

Vertical perforated brick HLz, EN 771-1:2011+A1:2015

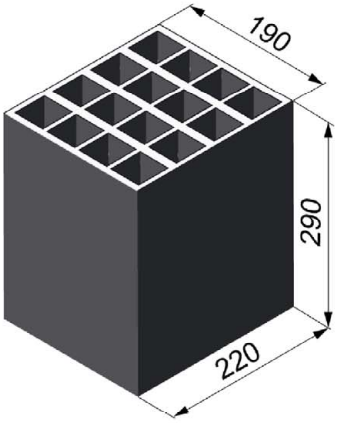

Producer		e.g. Perceram		
Nominal dimensions	[mm]	length L	width W	height H
		220	190	290
Mean gross dry density ρ	[kg/dm³]	≥ 0,7		
Mean compressive strength / Min. compressive strength single brick [1)]	[N/mm²]	7,5 / 6 or 10 / 8 or 12,5 / 10		
Standard or annex		EN 771-1:2011+A1:2015		

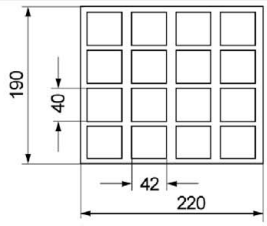

Dimension see also Annex B 18

Table C72.1: Installation parameters
(Pre-positioned anchorage with perforated sleeve FIS H K)

Anchor rod		**M6**	**M8**	**M6**	**M8**	**-**		**M8**	**M10**	**M8**	**M10**	**-**		**M12**	**M16**	**M12**	**M16**
Internal threaded anchor FIS E		-		-		**M6**	**M8**	-		-		**M10**	**M12**	-		-	
						11x85						**15x85**					
Perforated sleeve FIS H K		**12x50**		**12x85**		**16x85**				**16x130**		**20x85**				**20x130**	
Anchor rod and internal threaded anchor FIS E with perforated sleeve FIS H K																	
Max. installation torque	max T_{inst}	[Nm]	2														
General installation parameters																	
Edge distance	$c_{min} = c_{cr}$	[mm]	110														
Spacing	s_{min} II = s_{cr} II	[mm]	220														
	s_{min} ⊥ = s_{cr} ⊥	[mm]	290														
Drilling method																	
Hammer drilling with hard metal hammer drill																	

[1)] The compressive strength of the single brick must not be less than 80% of the mean compressive strength.

Table C72.2: Group factors

Anchor rod		**M6**	**M8**	**M6**	**M8**	**-**		**M8**	**M10**	**M8**	**M10**	**-**		**M12**	**M16**	**M12**	**M16**
Internal threaded anchor FIS E		-		-		**M6**	**M8**	-		-		**M10**	**M12**	-		-	
						11x85						**15x85**					
Perforated sleeve FIS H K		**12x50**		**12x85**		**16x85**				**16x130**		**20x85**				**20x130**	
Group factors	$\alpha_{g,N}$ (s_{min} II)	[-]	2														
	$\alpha_{g,V}$ (s_{min} II)	[-]	2														
	$\alpha_{g,N}$ (s_{min} ⊥)	[-]	2														
	$\alpha_{g,V}$ (s_{min} ⊥)	[-]	2														

fischer injection system FIS V Plus for masonry

Performance
Vertical perforated brick HLz, dimensions, installation parameters

Annex C 72

Vertical perforated brick HLz, EN 771-1:2011+A1:2015

Table C73.1: Installation parameters
(Push through anchorage with perforated sleeve FIS H K)

Anchor rod			**M10**	**M12**	**M16**
Perforated sleeve FIS H K			**18x130/200**		**22x130/200**
Anchor rod with perforated sleeve FIS H K					
Max. installation torque	max T_{inst}	[Nm]	2		
General installation parameters					
Edge distance	$c_{min} = c_{cr}$	[mm]	110		
Spacing	s_{min} II = s_{cr} II	[mm]	220		
	s_{min} ⊥ = s_{cr} ⊥	[mm]	290		
Drilling method					
Hammer drilling with hard metal hammer drill					

Table C73.2: Group factors

Anchor rod			**M10**	**M12**	**M16**
Perforated sleeve FIS H K			**18x130/200**		**22x130/200**
Group factors	$\alpha_{g,N}$ (s_{min} II)	[-]	2		
	$\alpha_{g,V}$ (s_{min} II)	[-]	2		
	$\alpha_{g,N}$ (s_{min} ⊥)	[-]	2		
	$\alpha_{g,V}$ (s_{min} ⊥)	[-]	2		

fischer injection system FIS V Plus for masonry

Performance
Vertical perforated brick HLz, dimensions, installation parameters

Annex C 73

Vertical perforated brick HLz, EN 771-1:2011+A1:2015

Table C74.1: Characteristic resistance to pull-out failure or brick breakout failure of a single anchor under tension loading (Pre-positioned anchorage)

Anchor rod		**M6**	**M8**	**M6**	**M8**	**-**	**M8**	**M10**	**M8**	**M10**	**-**	**M12**	**M16**	**M12**	**M16**
Internal threaded anchor FIS E		**-**		**-**		**M6 M8**	**-**		**-**		**M10 M12**	**-**		**-**	
						11x85					**15x85**				
Perforated sleeve FIS H K		**12x50**		**12x85**		**16x85**			**16x130**		**20x85**			**20x130**	
Tension resistance $N_{Rk} = N_{Rk,p} = N_{Rk,b} = N_{Rk,p,c} = N_{Rk,b,c}$ [kN] depending on the mean compressive strength f_b; Installation and use condition w/w, w/d, d/d; (temperature range 50/80°C)[2)]															
Mean compressive strength / Min. compressive strength single brick [1)]	Use con-ditions														
7,5 / 6 N/mm²	w/w w/d	0,3		1,2		1,2			1,5		1,2			1,5	
	d/d	0,4		1,5		1,5			1,5		1,5			1,5	
10 / 8 N/mm²	w/w w/d	0,5		1,5		1,5			2,0		1,5			2,0	
	d/d	0,5		2,0		2,0			2,5		2,0			2,5	
12,5 / 10 N/mm²	w/w w/d	0,6		2,0		2,0			2,5		2,0			2,5	
	d/d	0,6		2,5		2,5			3,0		2,5			3,0	

1) The compressive strength of the single brick must not be less than 80% of the mean compressive strength.
2) For temperature range 72/120°C: $N_{Rk\,(72/120°C)} = 0{,}83 \cdot N_{Rk\,(50/80°C)}$.

Table C74.2: Characteristic resistance to pull-out failure or brick breakout failure of a single anchor under tension loading (Push through anchorage)

Anchor rod		**M10**	**M12**	**M16**
Perforated sleeve FIS H K		**18x130/200**		**22x130/200**
Tension resistance $N_{Rk} = N_{Rk,p} = N_{Rk,b} = N_{Rk,p,c} = N_{Rk,b,c}$ [kN] depending on the mean compressive strength f_b; Installation and use condition w/w, w/d, d/d; (temperature range 50/80°C)[2)]				
Mean compressive strength / Min. compressive strength single brick [1)]	Use con-ditions			
7,5 / 6 N/mm²	w/w w/d	1,5		
	d/d	1,5		
10 / 8 N/mm²	w/w w/d	2,0		
	d/d	2,5		
12,5 / 10 N/mm²	w/w w/d	2,5		
	d/d	3,0		

1) The compressive strength of the single brick must not be less than 80% of the mean compressive strength.
2) For temperature range 72/120°C: $N_{Rk\,(72/120°C)} = 0{,}83 \cdot N_{Rk\,(50/80°C)}$.

Factor for job site tests and displacements see annex C 123.

Vertical perforated brick HLz, EN 771-1:2011+A1:2015

Table C75.1: Characteristic resistance to local brick failure or brick edge failure of a single anchor under shear loading (Pre-positioned anchorage)

Anchor rod		**M6**	**M8**	**M6**	**M8**	**-**	**M8**	**M10**	**M8**	**M10**	**-**	**M12**	**M16**	**M12**	**M16**
Internal threaded anchor FIS E		**-**		**-**		**M6 M8** 11x85	**-**		**-**		**M10 M12** 15x85	**-**		**-**	
Perforated sleeve FIS H K		**12x50**		**12x85**		**16x85**			**16x130**		**20x85**			**20x130**	
Shear resistance $V_{Rk} = V_{Rk,b} = V_{Rk,c,II} = V_{Rk,c,\perp}$ [kN] depending on the mean compressive strength f_b; Installation and use condition w/w, w/d, d/d; (temperature range 50/80°C and 72/120°C)															
Mean compressive strength / Min. compressive strength single brick [1]	Use con-ditions														
7,5 / 6 N/mm²	w/w w/d d/d	1,5		1,5		1,5			2,5		1,5			2,0	
10 / 8 N/mm²	w/w w/d d/d	2,0		2,0		2,0			3,5		2,0			3,0	
12,5 / 10 N/mm²	w/w w/d d/d	2,5		3,0		3,0			4,5		3,0			3,5	

[1] The compressive strength of the single brick must not be less than 80% of the mean compressive strength.

Table C75.2: Characteristic resistance to local brick failure or brick edge failure of a single anchor under shear loading (Push through anchorage)

Anchor rod		**M10**	**M12**	**M16**
Perforated sleeve FIS H K		**18x130/200**		**22x130/200**
Shear resistance $V_{Rk} = V_{Rk,b} = V_{Rk,c,II} = V_{Rk,c,\perp}$ [kN] depending on the mean compressive strength f_b; Installation and use condition w/w, w/d, d/d; (temperature range 50/80°C and 72/120°C)				
Mean compressive strength / Min. compressive strength single brick [1]	Use con-ditions			
7,5 / 6 N/mm²	w/w w/d d/d	2,0		
10 / 8 N/mm²	w/w w/d d/d	3,0		
12,5 / 10 N/mm²	w/w w/d d/d	3,5		

[1] The compressive strength of the single brick must not be less than 80% of the mean compressive strength.

Factor for job site tests and displacements see annex C123.

fischer injection system FIS V Plus for masonry

Performance
Vertical perforated brick HLz, Characteristic resistance under shear loading

Annex C 75

Vertical perforated brick HLz, EN 771-1:2011+A1:2015

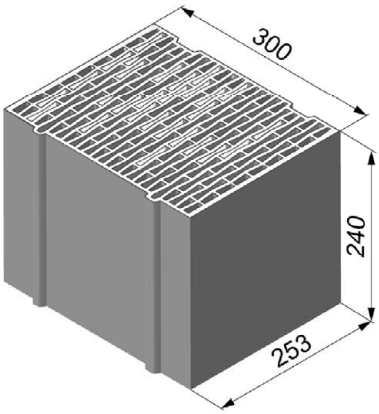

Producer		e.g. Ziegelwerk Brenna		
Nominal dimensions	[mm]	length L	width W	height H
		253	300	240
Mean gross dry density ρ	[kg/dm³]	≥ 0,8		
Mean compressive strength / Min. compressive strength single brick [1)]	[N/mm²]	2,5 / 2 or 5 / 4 or 8 / 6		
Standard or annex		EN 771-1:2011+A1:2015		

Dimension see also Annex B 18

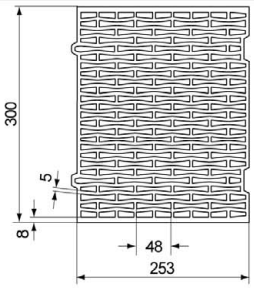

Table C76.1: Installation parameters
(Pre-positioned anchorage with perforated sleeve FIS H K)

Anchor rod		**M6**	**M8**	**M6**	**M8**	**-**		**M8**	**M10**	**M8**	**M10**	**-**		**M12**	**M16**	**M12**	**M16**
Internal threaded anchor FIS E		**-**		**-**		**M6**	**M8**	**-**		**-**		**M10**	**M12**	**-**		**-**	
						11x85						**15x85**					
Perforated sleeve FIS H K		**12x50**		**12x85**		**16x85**				**16x130**		**20x85**				**20x130**	
Anchor rod and internal threaded anchor FIS E with perforated sleeve FIS H K																	
Max. installation torque	max T_{inst}	[Nm]	2														
General installation parameters																	
Edge distance	$c_{min} = c_{cr}$	[mm]	60														
Spacing	s_{min} II = s_{cr} II	[mm]	255														
	s_{min} ⊥ = s_{cr} ⊥	[mm]	240														
Drilling method																	
Hammer drilling with hard metal hammer drill																	

1) The compressive strength of the single brick must not be less than 80% of the mean compressive strength.

Table C76.2: Group factors

Anchor rod		**M6**	**M8**	**M6**	**M8**	**-**		**M8**	**M10**	**M8**	**M10**	**-**		**M12**	**M16**	**M12**	**M16**
Internal threaded anchor FIS E		**-**		**-**		**M6**	**M8**	**-**		**-**		**M10**	**M12**	**-**		**-**	
						11x85						**15x85**					
Perforated sleeve FIS H K		**12x50**		**12x85**		**16x85**				**16x130**		**20x85**				**20x130**	
Group factors	$\alpha_{g,N}$ (s_{min} II)	[-]	2														
	$\alpha_{g,V}$ (s_{min} II)	[-]	2														
	$\alpha_{g,N}$ (s_{min} ⊥)	[-]	2														
	$\alpha_{g,V}$ (s_{min} ⊥)	[-]	2														

fischer injection system FIS V Plus for masonry

Performance
Vertical perforated brick HLz, dimensions, installation parameters

Annex C 76

Vertical perforated brick HLz, EN 771-1:2011+A1:2015

Table C77.1: Installation parameters
(Push through anchorage with perforated sleeve FIS H K)

Anchor rod			**M10**	**M12**	**M16**
Perforated sleeve FIS H K			**18x130/200**		**22x130/200**
Anchor rod with perforated sleeve FIS H K					
Max. installation torque	T_{inst}	[Nm]	2		
General installation parameters					
Edge distance	$c_{min} = c_{cr}$	[mm]	60		
Spacing	s_{min} II = s_{cr} II	[mm]	255		
	s_{min} ⊥ = s_{cr} ⊥	[mm]	240		
Drilling method					
Hammer drilling with hard metal hammer drill					

Table C77.2: Group factors

Anchor rod			**M10**	**M12**	**M16**
Perforated sleeve FIS H K			**18x130/200**		**22x130/200**
Group factors	$\alpha_{g,N}$ (s_{min} II)	[-]	2		
	$\alpha_{g,V}$ (s_{min} II)	[-]	2		
	$\alpha_{g,N}$ (s_{min} ⊥)	[-]	2		
	$\alpha_{g,V}$ (s_{min} ⊥)	[-]	2		

fischer injection system FIS V Plus for masonry

Performance
Vertical perforated brick HLz, dimensions, installation parameters

Annex C 77

Vertical perforated brick HLz, EN 771-1:2011+A1:2015

Table C78.1: Characteristic resistance to pull-out failure or brick breakout failure of a single anchor under tension loading (Pre-positioned anchorage)

Anchor rod	**M6**	**M8**	**M6**	**M8**	**-**	**M8**	**M10**	**M8**	**M10**	**-**	**M12**	**M16**	**M12**	**M16**
Internal threaded anchor FIS E	**-**		**-**		**M6 M8**	**-**		**-**		**M10 M12**	**-**		**-**	
					11x85					**15x85**				
Perforated sleeve FIS H K	**12x50**		**12x85**		**16x85**			**16x130**		**20x85**			**20x130**	

Tension resistance $N_{Rk} = N_{Rk,p} = N_{Rk,b} = N_{Rk,p,c} = N_{Rk,b,c}$ [kN] depending on the mean compressive strength f_b; Installation and use condition w/w, w/d, d/d; (temperature range 50/80°C) [2]

Mean compressive strength / Min. compressive strength single brick [1]	Use con-ditions													
2,5 / 2 N/mm²	w/w	w/d	-[3]		0,50		0,50		0,40		0,50			0,40
	d/d		0,30		0,50		0,50		0,50		0,50			0,50
5 / 4 N/mm²	w/w	w/d	0,50		0,90		0,90		0,90		0,90			0,90
	d/d		0,60		0,90		0,90		0,90		0,90			0,90
8 / 6 N/mm²	w/w	w/d	0,75		1,50		1,50		1,20		1,50			1,20
	d/d		0,90		1,50		1,50		1,50		1,50			1,50

1) The compressive strength of the single brick must not be less than 80% of the mean compressive strength.
2) For temperature range 72/120°C: $N_{Rk\,(72/120°C)} = 0{,}83 \cdot N_{Rk\,(50/80°C)}$.
3) No performance assessed.

Table C78.2: Characteristic resistance to pull-out failure or brick breakout failure of a single anchor under tension loading (Push through anchorage)

Anchor rod	**M10**	**M12**	**M16**
Perforated sleeve FIS H K	**18x130/200**		**22x130/200**

Tension resistance $N_{Rk} = N_{Rk,p} = N_{Rk,b} = N_{Rk,p,c} = N_{Rk,b,c}$ [kN] depending on the mean compressive strength f_b; Installation and use condition w/w, w/d, d/d; (temperature range 50/80°C) [2]

Mean compressive strength / Min. compressive strength single brick [1]	Use con-ditions		
2,5 / 2 N/mm²	w/w	w/d	0,4
	d/d		0,5
5 / 4 N/mm²	w/w	w/d	0,9
	d/d		0,9
8 / 6 N/mm²	w/w	w/d	1,2
	d/d		1,5

1) The compressive strength of the single brick must not be less than 80% of the mean compressive strength.
2) For temperature range 72/120°C: $N_{Rk\,(72/120°C)} = 0{,}83 \cdot N_{Rk\,(50/80°C)}$.

Factor for job site tests and displacements see annex C 123.

Vertical perforated brick HLz, EN 771-1:2011+A1:2015

Table C79.1: Characteristic resistance to local brick failure or brick edge failure of a single anchor under shear loading (Pre-positioned anchorage)

Anchor rod	**M6**	**M8**	**M6**	**M8**	**-**	**M8**	**M10**	**M8**	**M10**	**-**	**M12**	**M16**	**M12**	**M16**
Internal threaded anchor FIS E	**-**		**-**		**M6 M8**	**-**		**-**		**M10 M12**	**-**		**-**	
					11x85					**15x85**				
Perforated sleeve FIS H K	**12x50**		**12x85**		**16x85**			**16x130**		**20x85**			**20x130**	

Shear resistance $V_{Rk} = V_{Rk,b} = V_{Rk,c,II} = V_{Rk,c,\perp}$ [kN] depending on the mean compressive strength f_b; Installation and use condition w/w, w/d, d/d; (temperature range 50/80°C and 72/120°C)

Mean compressive strength / Min. compressive strength single brick [1]	Use con-ditions		
2,5 / 2 N/mm²	w/w w/d d/d	0,5	0,6
5 / 4 N/mm²	w/w w/d d/d	0,9	1,2
8 / 6 N/mm²	w/w w/d d/d	1,5	1,5

[1] The compressive strength of the single brick must not be less than 80% of the mean compressive strength.

Table C79.2: Characteristic resistance to local brick failure or brick edge failure of a single anchor under shear loading (Push through anchorage)

Anchor rod	**M10**	**M12**	**M16**
Perforated sleeve FIS H K	**18x130/200**		**22x130/200**

Shear resistance $V_{Rk} = V_{Rk,b} = V_{Rk,c,II} = V_{Rk,c,\perp}$ [kN] depending on the mean compressive strength f_b; Installation and use condition w/w, w/d, d/d; (temperature range 50/80°C and 72/120°C)

Mean compressive strength / Min. compressive strength single brick [1]	Use con-ditions		
2,5 / 2 N/mm²	w/w w/d d/d	0,5	0,6
5 / 4 N/mm²	w/w w/d d/d	0,9	1,2
8 / 6 N/mm²	w/w w/d d/d	1,5	1,5

[1] The compressive strength of the single brick must not be less than 80% of the mean compressive strength.

Factor for job site tests and displacements see annex C 123.

fischer injection system FIS V Plus for masonry

Performance
Vertical perforated brick HLz, Characteristic resistance under shear loading

Annex C 79

Vertical perforated brick HLz, Porotherm W 44, filled with mineral wool, EN 771-1:2011+A1:2015

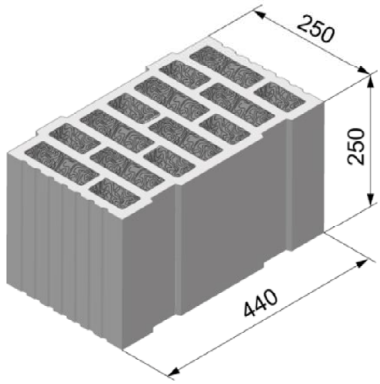

Producer		e.g. Wienerberger		
Nominal dimensions	[mm]	length L	width W	height H
		250	440	250
Mean gross dry density ρ	[kg/dm³]	0,7		
Mean compressive strength / Min. compressive strength single brick [1)]	[N/mm²]	8 / 6 or 10 / 8 or 12,5 / 10		
Standard or annex		EN 771-1:2011+A1:2015		

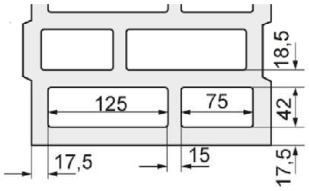

Dimension see also Annex B 18

Table C80.1: Installation parameters (Pre-positioned anchorage with perforated sleeve FIS H K)

Anchor rod			**M6**	**M8**	**M6**	**M8**	**-**	**M8**	**M10**	**M8**	**M10**	**-**	**M12**	**M16**	**M12**	**M16**	**M12**	**M16**
Internal threaded anchor FIS E			-		-		**M6 M8** **11x85**	-		-		**M10 M12** **15x85**	-		-		-	
Perforated sleeve FIS H K			**12x50**		**12x85**		**16x85**			**16x130**		**20x85**			**20x130**		**20x200**	
Anchor rod and internal threaded anchor FIS E with perforated sleeve FIS H K																		
Max. installation torque	max T_{inst}	[Nm]	2					5		2	5	6						
General installation parameters																		
Edge distance	$c_{min} = c_{cr}$	[mm]	60															
Spacing	s_{min} ∥	[mm]	80															
	s_{cr} ∥	[mm]	250															
	s_{min} ⊥	[mm]	80															
	s_{cr} ⊥	[mm]	250															
Drilling method																		
Rotary drilling with carbide drill																		

Table C80.2: Group factors

Anchor rod			**M6**	**M8**	**M6**	**M8**	**-**	**M8**	**M10**	**M8**	**M10**	**-**	**M12**	**M16**	**M12**	**M16**	**M12**	**M16**
Internal threaded anchor FIS E			-		-		**M6 M8** **11x85**	-		-		**M10 M12** **15x85**	-		-		-	
Perforated sleeve FIS H K			**12x50**		**12x85**		**16x85**			**16x130**		**20x85**			**20x130**		**20x200**	
Group factors	$\alpha_{g,N}$ (s_{min} ∥)	[-]	1,3															
	$\alpha_{g,V}$ (s_{min} ∥)	[-]	1,3															
	$\alpha_{g,N}$ (s_{min} ⊥)	[-]	0,8															
	$\alpha_{g,V}$ (s_{min} ⊥)	[-]	1,3															

fischer injection system FIS V Plus for masonry

Performance
Vertical perforated brick HLz, Porotherm W 44, filled with mineral wool; dimensions, installation parameters

Annex C 80

Vertical perforated brick HLz, Porotherm W 44, filled with mineral wool, EN 771-1:2011+A1:2015

Table C81.1: Installation parameters
(Push through anchorage with perforated sleeve FIS H K)

Anchor rod			**M10**	**M12**	**M16**
Perforated sleeve FIS H K			**18x130/200**		**22x130/200**
Anchor rod with perforated sleeve FIS H K					
Max. installation torque	max T_{inst}	[Nm]	5	6	
General installation parameters					
Edge distance	$c_{min} = c_{cr}$	[mm]	60		
Spacing	s_{min} II	[mm]	80		
	s_{cr} II	[mm]	250		
	s_{min} ⊥	[mm]	80		
	s_{cr} ⊥	[mm]	250		
Drilling method					
Rotary drilling with carbide drill					

Table C81.2: Group factors

Anchor rod			**M10**	**M12**	**M16**
Perforated sleeve FIS H K			**18x130/200**		**22x130/200**
Group factors	$\alpha_{g,N}$ (s_{min} II)	[-]	1,3		
	$\alpha_{g,V}$ (s_{min} II)	[-]	1,3		
	$\alpha_{g,N}$ (s_{min} ⊥)	[-]	0,8		
	$\alpha_{g,V}$ (s_{min} ⊥)	[-]	1,3		

fischer injection system FIS V Plus for masonry

Performance
Vertical perforated brick HLz, Porotherm W 44, filled with mineral wool; dimensions, installation parameters

Annex C 81

Vertical perforated brick HLz, Porotherm W 44, filled with mineral wool, EN 771-1:2011+A1:2015

Table C82.1: Characteristic resistance to pull-out failure or brick breakout failure of a single anchor under tension loading (Pre-positioned anchorage)

Anchor rod	M6	M8	M6	M8	-		M8	M10	M8	M10	-		M12	M16	M12	M16	M12	M16
Internal threaded anchor FIS E	-		-		M6	M8	-		-		M10	M12	-		-		-	
					11x85						15x85							
Perforated sleeve FIS H K	12x50		12x85		16x85				16x130		20x85				20x130		20x200	

Tension resistance $N_{Rk} = N_{Rk,p} = N_{Rk,b} = N_{Rk,p,c} = N_{Rk,b,c}$ [kN] depending on the mean compressive strength f_b; Installation and use condition w/w, w/d, d/d; (temperature range 50/80°C)[2)]

Mean compressive strength / Min. compressive strength single brick [1)]	Use con-ditions																	
8 / 6 N/mm²	w/w	w/d	0,75		1,50		1,20				1,50						2,50	
	d/d		0,90		1,50		1,20				1,50						2,50	
10 / 8 N/mm²	w/w	w/d	0,90		1,50		1,20				1,50						2,50	
	d/d		0,90		2,00		1,50				2,00						3,00	
12,5 / 10 N/mm²	w/w	w/d	0,90		2,00		1,50				2,00						3,00	
	d/d		1,20		2,00		1,50				2,00						3,50	

1) The compressive strength of the single brick must not be less than 80% of the mean compressive strength.
2) For temperature range 72/120°C: $N_{Rk\,(72/120°C)} = 0{,}83 \cdot N_{Rk\,(50/80°C)}$.

Table C82.2: Characteristic resistance to pull-out failure or brick breakout failure of a single anchor under tension loading (Push through anchorage)

Anchor rod	M10	M12	M16
Perforated sleeve FIS H K	18x130/200		22x130/200

Tension resistance $N_{Rk} = N_{Rk,p} = N_{Rk,b} = N_{Rk,p,c} = N_{Rk,b,c}$ [kN] depending on the mean compressive strength f_b; Installation and use condition w/w, w/d, d/d; (temperature range 50/80°C)[2)]

Mean compressive strength / Min. compressive strength single brick [1)]	Use con-ditions		
8 / 6 N/mm²	w/w	w/d	1,5
	d/d		1,5
10 / 8 N/mm²	w/w	w/d	1,5
	d/d		2,0
12,5 / 10 N/mm²	w/w	w/d	2,0
	d/d		2,0

1) The compressive strength of the single brick must not be less than 80% of the mean compressive strength.
2) For temperature range 72/120°C: $N_{Rk\,(72/120°C)} = 0{,}83 \cdot N_{Rk\,(50/80°C)}$.

Factor for job site tests and displacements see annex C 123.

fischer injection system FIS V Plus for masonry

Performance
Vertical perforated brick HLz, Porotherm W 44, filled with mineral wool,
Characteristic resistance under tension loading

Annex C 82

Vertical perforated brick HLz, Porotherm W 44, filled with mineral wool, EN 771-1:2011+A1:2015

Table C83.1: Characteristic resistance to local brick failure or brick edge failure of a single anchor under shear loading (Pre-positioned anchorage)

Anchor rod	M6	M8	M6	M8	-		M8	M10	M8	M10	-		M12	M16	M12	M16	M12	M16
Internal threaded anchor FIS E	-		-		M6	M8	-		-		M10	M12	-		-		-	
					11x85						15x85							
Perforated sleeve FIS H K	12x50		12x85		16x85				16x130		20x85				20x130		20x200	

Shear resistance $V_{Rk} = V_{Rk,b} = V_{Rk,c,II} = V_{Rk,c,\perp}$ [kN] depending on the mean compressive strength f_b; Installation and use condition w/w, w/d, d/d; (temperature range 50/80°C and 72/120°C)

Mean compressive strength / Min. compressive strength single brick [1]	Use conditions						
8 / 6 N/mm²	w/w, w/d, d/d	0,9		1,2	0,9	1,2	1,2
10 / 8 N/mm²	w/w, w/d, d/d	0,9		1,5	0,9	1,5	1,2
12,5 / 10 N/mm²	w/w, w/d, d/d	1,2		1,5	1,2	1,5	1,5

[1] The compressive strength of the single brick must not be less than 80% of the mean compressive strength.

Table C83.2: Characteristic resistance to local brick failure or brick edge failure of a single anchor under shear loading (Push through anchorage)

Anchor rod	M10	M12	M16
Perforated sleeve FIS H K	18x130/200		22x130/200

Shear resistance $V_{Rk} = V_{Rk,b} = V_{Rk,c,II} = V_{Rk,c,\perp}$ [kN] depending on the mean compressive strength f_b; Installation and use condition w/w, w/d, d/d; (temperature range 50/80°C and 72/120°C)

Mean compressive strength / Min. compressive strength single brick [1]	Use conditions		
8 / 6 N/mm²	w/w, w/d, d/d	1,2	1,2
10 / 8 N/mm²	w/w, w/d, d/d	1,5	1,5
12,5 / 10 N/mm²	w/w, w/d, d/d	1,5	1,5

[1] The compressive strength of the single brick must not be less than 80% of the mean compressive strength.

Factor for job site tests and displacements see annex C 123.

Vertical perforated brick HLz, EN 771-1:2011+A1:2015

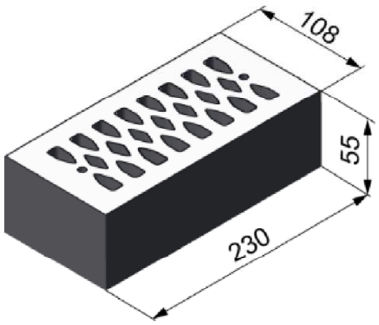

Producer		e.g. Wienerberger.		
Nominal dimensions	[mm]	length L	width W	height H
		230	108	55
Mean gross dry density ρ	[kg/dm³]	≥ 1,4		
Mean compressive strength / Min. compressive strength single brick [1)]	[N/mm²]	2,5 / 2 or 5 / 4 or 8 / 6 or 10 / 8		
Standard or annex		EN 771-1:2011+A1:2015		

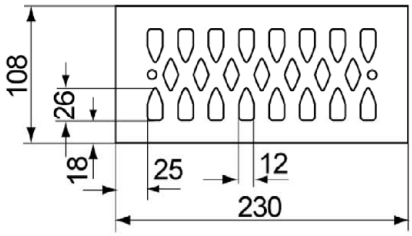

Dimension see also Annex B 18

Table C84.1: Installation parameters

Anchor rod			M6	M8	M6	M8	-		M8	M10	-		M12	M16
Internal threaded anchor FIS E			-		-		M6	M8	-		M10	M12	-	
							11x85				15x85			
Perforated sleeve FIS H K			12x50		12x85		16x85				20x85			
Anchor rod and internal threaded anchor FIS E with perforated sleeve FIS H K														
Max. installation torque	max T_{inst}	[Nm]	2											
General installation parameters														
Edge distance	$c_{min} = c_{cr}$	[mm]	60											
Spacing	s_{min} ∥	[mm]	80											
	s_{cr} ∥	[mm]	230											
	s_{min} ⊥	[mm]	60											
	s_{cr} ⊥	[mm]	60											
Drilling method														
Hammer drilling with hard metal hammer drill														

1) The compressive strength of the single brick must not be less than 80% of the mean compressive strength.

Table C84.2: Group factors

Anchor rod			M6	M8	M6	M8	-		M8	M10	-		M12	M16
Internal threaded anchor FIS E			-		-		M6	M8	-		M10	M12	-	
							11x85				15x85			
Perforated sleeve FIS H K			12x50		12x85		16x85				20x85			
Group factors	$\alpha_{g,N}$ (s_{min} ∥)	[-]	2											
	$\alpha_{g,V}$ (s_{min} ∥)	[-]	2											
	$\alpha_{g,N}$ (s_{min} ⊥)	[-]	2											
	$\alpha_{g,V}$ (s_{min} ⊥)	[-]	2											

fischer injection system FIS V Plus for masonry

Performance
Vertical perforated brick HLz, dimensions, installation parameters

Annex C 84

Vertical perforated brick HLz, EN 771-1:2011+A1:2015

Table C85.1: Characteristic resistance to pull-out failure or brick breakout failure of a single anchor under tension loading [1)]

Anchor rod	**M6**	**M8**	**M6**	**M8**	**-**		**M8**	**M10**	**-**		**M12**	**M16**
Internal threaded anchor FIS E	**-**		**-**		**M6**	**M8**	**-**		**M10**	**M12**	**-**	
					11x85				**15x85**			
Perforated sleeve FIS H K	**12x50**		**12x85**		**16x85**				**20x85**			

Tension resistance $N_{Rk} = N_{Rk,p} = N_{Rk,b} = N_{Rk,p,c} = N_{Rk,b,c}$ [kN] depending on the mean compressive strength f_b; Installation and use condition w/w, w/d, d/d; (temperature range 50/80°C) [3)]

Mean compressive strength / Min. compressive strength single brick [2)]	Use con-ditions					
2,5 / 2 N/mm²	w/w	w/d	0,30	0,90	0,75	0,50
	d/d		0,30	0,90	0,90	0,60
5 / 4 N/mm²	w/w	w/d	0,60	1,50	1,50	0,90
	d/d		0,75	2,00	1,50	1,20
8 / 6 N/mm²	w/w	w/d	0,90	2,50	2,50	1,50
	d/d		0,90	3,00	2,50	1,50
10 / 8 N/mm²	w/w	w/d	1,20	3,50	3,00	2,00
	d/d		1,50	4,00	3,50	2,50

1) If the fixing is in a solid area, for w/w, the characteristic value shall be reduced with the factor 0,64.
2) The compressive strength of the single brick must not be less than 80% of the mean compressive strength.
3) For temperature range 72/120°C: $N_{Rk\,(72/120°C)} = 0{,}83 \cdot N_{Rk\,(50/80°C)}$.

Table C85.2: Characteristic resistance to local brick failure or brick edge failure of a single anchor under shear loading

Anchor rod	**M6**	**M8**	**M6**	**M8**	**-**		**M8**	**M10**	**-**		**M12**	**M16**
Internal threaded anchor FIS E	**-**		**-**		**M6**	**M8**	**-**		**M10**	**M12**	**-**	
					11x85				**15x85**			
Perforated sleeve FIS H K	**12x50**		**12x85**		**16x85**				**20x85**			

Shear resistance $V_{Rk} = V_{Rk,b} = V_{Rk,c,II} = V_{Rk,c,\perp}$ [kN] depending on the mean compressive strength f_b; Installation and use condition w/w, w/d, d/d; (temperature range 50/80°C and 72/120°C)

Mean compressive strength / Min. compressive strength single brick [1)]	Use con-ditions			
2,5 / 2 N/mm²	w/w	w/d	0,6	0,4
	d/d			
5 / 4 N/mm²	w/w	w/d	1,2	0,9
	d/d			
8 / 6 N/mm²	w/w	w/d	1,5	1,2
	d/d			
10 / 8 N/mm²	w/w	w/d	2,5	1,5
	d/d			

1) The compressive strength of the single brick must not be less than 80% of the mean compressive strength. Factor for job site tests and displacements see annex C123.

fischer injection system FIS V Plus for masonry

Performance
Vertical perforated brick HLz, Characteristic resistance under tension and shear loading

Annex C 85

Vertical perforated brick filled with mineral wool, EN 771-1:2011+A1:2015

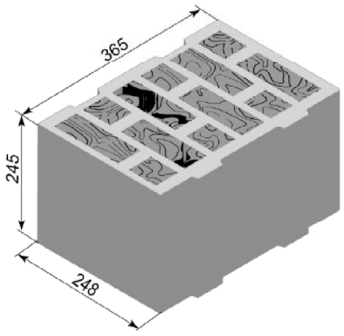

Producer		e.g. Wienerberger		
Nominal dimensions	[mm]	length L	width W	height H
		≥ 365	≥ 248	≥ 245
Mean gross dry density ρ	[kg/dm³]	0,6		
Mean compressive strength / Min. compressive strength single brick [1)]	[N/mm²]	10 / 8		
Standard or annex		EN 771-1:2011+A1:2015		

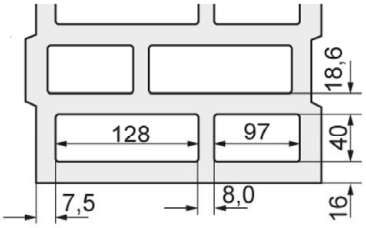

Dimension see also Annex B 19

Table C86.1: Installation parameters
(Pre-positioned anchorage with perforated sleeve FIS H K)

Anchor rod	**M6**	**M8**	**-**		**M8**	**M10**	**M8**	**M10**	**-**		**M12**	**M16**	**M12**	**M16**
Internal threaded anchor FIS E	**-**		**M6**	**M8**	**-**		**-**		**M10**	**M12**	**-**		**-**	
			11x85						**15x85**					
Perforated sleeve FIS H K	**12x85**		**16x85**				**16x130**		**20x85**				**20x130**	

Anchor rod and internal threaded anchor FIS E with perforated sleeve FIS H K				
Max. installation torque	max T_{inst}	[Nm]	2	4
General installation parameters				
Edge distance	$c_{min} = c_{cr}$	[mm]	100	
Spacing	s_{min} ∥	[mm]	250	
	s_{cr} ∥	[mm]		
	s_{min} ⊥	[mm]	245	
	s_{cr} ⊥	[mm]		
Drilling method				
Hammer drilling with hard metal hammer drill				

1) The compressive strength of the single brick must not be less than 80% of the mean compressive strength.

Table C86.2: Group factors

Anchor rod	**M6**	**M8**	**M8**	**M10**	**M8**	**M10**	**M12**	**M16**	**M12**	**M16**
Perforated sleeve FIS H K	**12x85**		**16x85**		**16x130**		**20x85**		**20x130**	
Group factors $\alpha_{g,N}$ (s_{min} ∥) = $\alpha_{g,V}$ (s_{min} ∥)	[-]	2								
Group factors $\alpha_{g,N}$ (s_{min} ⊥) = $\alpha_{g,V}$ (s_{min} ⊥)	[-]									

fischer injection system FIS V Plus for masonry

Performance
Vertical perforated brick filled with mineral wool, dimensions, installation parameters

Annex C 86

Vertical perforated brick filled with mineral wool, EN 771-1:2011+A1:2015

Table C87.1: Installation parameters
(Push through anchorage with perforated sleeve FIS H K)

Anchor rod			**M10**	**M12**	**M16**
Perforated sleeve FIS H K			**18x130/200**		**22x130/200**
Anchor rod with perforated sleeve FIS H K					
Max. installation torque	max T_{inst}	[Nm]	4		
General installation parameters					
Edge distance	$c_{min} = c_{cr}$	[mm]	100		
Spacing	s_{min} II	[mm]	250		
	s_{cr} II	[mm]	250		
	s_{min} ⊥	[mm]	245		
	s_{cr} ⊥	[mm]	245		
Drilling method					
Hammer drilling with hard metal hammer drill					

Table C87.2: Group factors

Anchor rod			**M10**	**M12**	**M16**
Perforated sleeve FIS H K			**18x130/200**		**22x130/200**
Group factors	$\alpha_{g,N}$ (s_{min} II)	[-]	2		
	$\alpha_{g,V}$ (s_{min} II)	[-]	2		
	$\alpha_{g,N}$ (s_{min} ⊥)	[-]	2		
	$\alpha_{g,V}$ (s_{min} ⊥)	[-]	2		

fischer injection system FIS V Plus for masonry

Performance
Vertical perforated brick filled with mineral wool, dimensions, installation parameters

Annex C 87

Vertical perforated brick filled with mineral wool, EN 771-1:2011+A1:2015

Table C88.1: Characteristic resistance to pull-out failure or brick breakout failure of a single anchor under tension loading (Pre-positioned anchorage)

Anchor rod	**M6**	**M8**	**-**	**M8**	**M10**	**M8**	**M10**	**-**	**M12**	**M16**	**M12**	**M16**	**M12**	**M16**
Internal threaded anchor FIS E	**-**		**M6**	**M8**	**-**		**-**	**M10**	**M12**	**-**	**-**		**-**	
			11x85					**15x85**						
Perforated sleeve FIS H K	**12x85**		**16x85**			**16x130**		**20x85**			**20x130**		**20x200**	

Tension resistance $N_{Rk} = N_{Rk,p} = N_{Rk,b} = N_{Rk,p,c} = N_{Rk,b,c}$ [kN] depending on the mean compressive strength f_b; Installation and use condition w/w, d/d; (temperature range 50/80°C)[2)]

Mean compressive strength / Min. compressive strength single brick [1)]	Use con-ditions						
10 / 8 N/mm²	w/w	2	1,5	2,5	2,0	2,0	3,0
	d/d	2	2,0	3,0	2,0	2,0	3,0

1) The compressive strength of the single brick must not be less than 80% of the mean compressive strength.
2) For temperature range 72/120°C no performance assessed.

Table C88.2: Characteristic resistance to pull-out failure or brick breakout failure of a single anchor under tension loading (Push through anchorage)

Anchor rod	**M10**	**M12**	**M16**
Perforated sleeve FIS H K	**18x130/200**		**22x130/200**

Tension resistance $N_{Rk} = N_{Rk,p} = N_{Rk,b} = N_{Rk,p,c} = N_{Rk,b,c}$ [kN] depending on the mean compressive strength f_b; Installation and use condition w/w, d/d; (temperature range 50/80°C)[2)]

Mean compressive strength / Min. compressive strength single brick [1)]	Use con-ditions		
10 / 8 N/mm²	w/w	1,5	2,0
	d/d	2,0	2,0

1) The compressive strength of the single brick must not be less than 80% of the mean compressive strength.
2) For temperature range 72/120°C no performance assessed.

Factor for job site tests and displacements see annex C 123.

Vertical perforated brick filled with mineral wool, EN 771-1:2011+A1:2015

Table C89.1: Characteristic resistance to local brick failure or brick edge failure of a single anchor under shear loading (Pre-positioned anchorage)

Anchor rod	**M6**	**M8**	**-**	**M8**	**M10**	**M8**	**M10**	**-**	**M12**	**M16**	**M12**	**M16**	**M12**	**M16**
Internal threaded anchor FIS E	**-**		**M6**	**M8**	**-**		**-**	**M10**	**M12**	**-**		**-**		**-**
			11x85					**15x85**						
Perforated sleeve FIS H K	**12x85**		**16x85**			**16x130**		**20x85**			**20x130**		**20x200**	

Shear resistance $V_{Rk} = V_{Rk,b} = V_{Rk,c,II} = V_{Rk,c,\perp}$ [kN] depending on the mean compressive strength f_b; Installation and use condition w/w, d/d; (temperature range 50/80°C)[2)]

Mean compressive strength / Min. compressive strength single brick [1)]	Use con-ditions									
10 / 8 N/mm²	w/w	2,5	3,0	3,0		3,0	1,5	1,5	1,5	1,5
	d/d	2,5	3,0	3,0		3,0	1,5	1,5	1,5	1,5

1) The compressive strength of the single brick must not be less than 80% of the mean compressive strength.
2) For temperature range 72/120°C no performance assessed.

Table C89.2: Characteristic resistance to local brick failure or brick edge failure of a single anchor under shear loading (Push through anchorage)

Anchor rod	**M10**	**M12**	**M16**
Perforated sleeve FIS H K	**18x130/200**		**22x130/200**

Shear resistance $V_{Rk} = V_{Rk,b} = V_{Rk,c,II} = V_{Rk,c,\perp}$ [kN] depending on the mean compressive strength f_b; Installation and use condition w/w, d/d; (temperature range 50/80°C)[2)]

Mean compressive strength / Min. compressive strength single brick [1)]	Use con-ditions		
10 / 8 N/mm²	w/w	3,0	1,5
	d/d	3,0	1,5

1) The compressive strength of the single brick must not be less than 80% of the mean compressive strength.
2) For temperature range 72/120°C no performance assessed.

Factor for job site tests and displacements see annex C 123.

Vertical perforated brick HLz, EN 771-1:2011+A1:2015

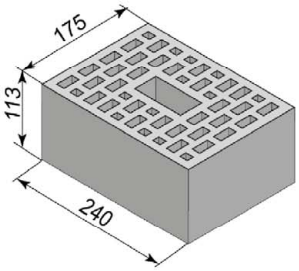

Producer		e.g. Wienerberger		
Nominal dimensions	[mm]	length L	width W	height H
		≥ 240	≥ 175	≥ 113
Mean gross dry density ρ	[kg/dm³]	0,9		
Mean compressive strength / Min. compressive strength single brick [1)]	[N/mm²]	12,5 / 10		
Standard or annex		EN 771-1:2011+A1:2015		

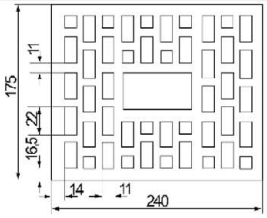

Dimension see also Annex B 19

Table C90.1: Installation parameters
(Pre-positioned anchorage with perforated sleeve FIS H K)

Anchor rod	**M6**	**M8**	**-**	**M8**	**M10**	**M8**	**M10**	**-**	**M12**	**M16**	**M12**	**M16**
Internal threaded anchor FIS E	**-**		**M6 / M8**	**-**		**-**		**M10 / M12**	**-**		**-**	
			11x85					**15x85**				
Perforated sleeve FIS H K	**12x85**		**16x85**			**16x130**		**20x85**			**20x130**	

Anchor rod and internal threaded anchor FIS E with perforated sleeve FIS H K			
Max. installation torque	max T_{inst}	[Nm]	2 / 4
General installation parameters			
Edge distance	$c_{min} = c_{cr}$	[mm]	100
Spacing	s_{min} ∥ / s_{cr} ∥	[mm]	240
	s_{min} ⊥ / s_{cr} ⊥	[mm]	115
Drilling method			
Hammer drilling with hard metal hammer drill			

[1)] The compressive strength of the single brick must not be less than 80% of the mean compressive strength.

Table C90.2: Group factors

Anchor rod	**M6**	**M8**	**M8**	**M10**	**M8**	**M10**	**M12**	**M16**	**M12**	**M16**
Perforated sleeve FIS H K	**12x85**		**16x85**		**16x130**		**20x85**		**20x130**	

Group factors	$\alpha_{g,N}$ (s_{min} ∥) = $\alpha_{g,V}$ (s_{min} ∥)	[-]	2
	$\alpha_{g,N}$ (s_{min} ⊥) = $\alpha_{g,V}$ (s_{min} ⊥)	[-]	2

fischer injection system FIS V Plus for masonry

Performance
Vertical perforated brick HLz, dimensions, installation parameters

Annex C 90

Vertical perforated brick HLz, EN 771-1:2011+A1:2015

Table C91.1: Installation parameters
(Push through anchorage with perforated sleeve FIS H K)

Anchor rod			**M10**	**M12**	**M16**
Perforated sleeve FIS H K			**18x130/200**		**22x130/200**
Anchor rod with perforated sleeve FIS H K					
Max. installation torque	max T_{inst}	[Nm]	4		
General installation parameters					
Edge distance	$c_{min} = c_{cr}$	[mm]	100		
Spacing	s_{min} II		240		
	s_{cr} II				
	s_{min} ⊥		115		
	s_{cr} ⊥				
Drilling method					
Hammer drilling with hard metal hammer drill					

Table C91.2: Group factors

Anchor rod			**M10**	**M12**	**M16**
Perforated sleeve FIS H K			**18x130/200**		**22x130/200**
Group factors	$\alpha_{g,N}$ (s_{min} II)	[-]	2		
	$\alpha_{g,V}$ (s_{min} II)				
	$\alpha_{g,N}$ (s_{min} ⊥)				
	$\alpha_{g,V}$ (s_{min} ⊥)				

fischer injection system FIS V Plus for masonry

Performance
Vertical perforated brick HLz, dimensions, installation parameters

Annex C 91

Vertical perforated brick HLz, EN 771-1:2011+A1:2015

Table C92.1: Characteristic resistance to pull-out failure or brick breakout failure of a single anchor under tension loading (Pre-positioned anchorage)

Anchor rod	**M6**	**M8**	**-**	**M8**	**M10**	**M8**	**M10**	**-**	**M12**	**M16**	**M12**	**M16**
Internal threaded anchor FIS E	**-**		**M6** / **11x85**	**M8**	**-**	**-**		**M10** / **15x85**	**M12**	**-**	**-**	
Perforated sleeve FIS H K	**12x85**		**16x85**			**16x130**		**20x85**			**20x130**	
Tension resistance $N_{Rk} = N_{Rk,p} = N_{Rk,b} = N_{Rk,p,c} = N_{Rk,b,c}$ [kN] depending on the mean compressive strength f_b; Installation and use condition w/w, d/d; (temperature range 50/80°C)[2)]												
Mean compressive strength / Min. compressive strength single brick [1)]	Use con-ditions											
12,5 / 10 N/mm²	w/w	3,5	4,0			4,5		4,5			4,0	
	d/d	4	4,5			5,0		5,0			4,0	

1) The compressive strength of the single brick must not be less than 80% of the mean compressive strength.
2) For temperature range 72/120°C no performance assessed.

Table C92.2: Characteristic resistance to pull-out failure or brick breakout failure of a single anchor under tension loading (Push through anchorage)

Anchor rod	**M10**	**M12**	**M16**
Perforated sleeve FIS H K	**18x130/200**		**22x130/200**
Tension resistance $N_{Rk} = N_{Rk,p} = N_{Rk,b} = N_{Rk,p,c} = N_{Rk,b,c}$ [kN] depending on the mean compressive strength f_b; Installation and use condition w/w, d/d; (temperature range 50/80°C)[2)]			
Mean compressive strength / Min. compressive strength single brick [1)]	Use con-ditions		
12,5 / 10 N/mm²	w/w	4,5	4,0
	d/d	5,0	4,0

1) The compressive strength of the single brick must not be less than 80% of the mean compressive strength.
2) For temperature range 72/120°C no performance assessed.

Factor for job site tests and displacements see annex C 123.

Vertical perforated brick HLz, EN 771-1:2011+A1:2015

Table C93.1: Characteristic resistance to local brick failure or brick edge failure of a single anchor under shear loading (Pre-positioned anchorage)

Anchor rod	**M6**	**M8**	**-**		**M8**	**M10**	**M8**	**M10**	**-**		**M12**	**M16**	**M12**	**M16**
Internal threaded anchor FIS E	**-**		**M6**	**M8**	**-**		**-**		**M10**	**M12**	**-**		**-**	
			11x85						**15x85**					
Perforated sleeve FIS H K	**12x85**		**16x85**				**16x130**		**20x85**				**20x130**	
Shear resistance $V_{Rk} = V_{Rk,b} = V_{Rk,c,II} = V_{Rk,c,\perp}$ [kN] depending on the mean compressive strength f_b; Installation and use condition w/w, d/d; (temperature range 50/80°C)[2)]														
Mean compressive strength / Min. compressive strength single brick [1)]	Use con-ditions													
12,5 / 10 N/mm²	w/w	4,0	5,5	4,0	5,5	5,5	7,0	5,5	7,0	7,0	6,0	6,0	8,0	6,0	8,0
	d/d	4,0	5,5	4,0	5,5	5,5	7,0	5,5	7,0	7,0	6,0	6,0	8,0	6,0	8,0

1) The compressive strength of the single brick must not be less than 80% of the mean compressive strength.
2) For temperature range 72/120°C no performance assessed.

Table C93.2: Characteristic resistance to local brick failure or brick edge failure of a single anchor under shear loading (Push through anchorage)

Anchor rod	**M10**	**M12**	**M16**
Perforated sleeve FIS H K	**18x130/200**		**22x130/200**
Shear resistance $V_{Rk} = V_{Rk,b} = V_{Rk,c,II} = V_{Rk,c,\perp}$ [kN] depending on the mean compressive strength f_b; Installation and use condition w/w, d/d; (temperature range 50/80°C)[2)]			
Mean compressive strength / Min. compressive strength single brick [1)]	Use con-ditions		
12,5 / 10 N/mm²	w/w	7,0	6,0	8,0
	d/d	7,0	6,0	8,0

1) The compressive strength of the single brick must not be less than 80% of the mean compressive strength.
2) For temperature range 72/120°C no performance assessed.

Factor for job site tests and displacements see annex C 123

Horizontal perforated brick LLz, EN 771-1:2011+A1:2015

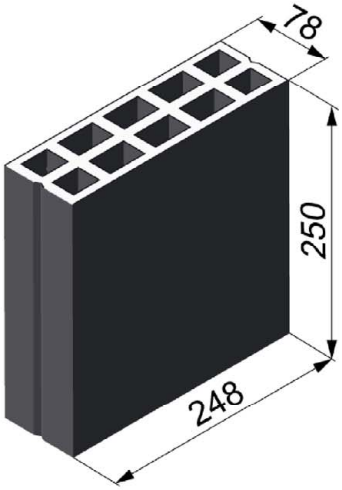

Producer		-		
Nominal dimensions	[mm]	length L	width W	height H
		250	78	248
Mean gross dry density ρ	[kg/dm³]	≥ 0,7		
Mean compressive strength / Min. compressive strength single brick [1)]	[N/mm²]	2,5 / 2 or 5 / 4 or 8 / 6		
Standard or annex		EN 771-1:2011+A1:2015		

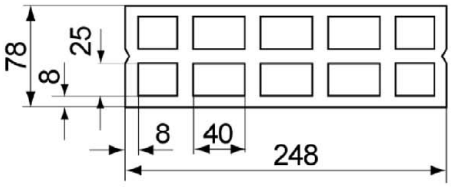

Dimension see also Annex B 19

Table C94.1: Installation parameters

Anchor rod			**M6**	**M8**
Perforated sleeve FIS H K			**12x50**	
Anchor rod with perforated sleeve FIS H K				
Max. installation torque	max T_{inst}	[Nm]	2	
General installation parameters				
Edge distance	$c_{min} = c_{cr}$	[mm]	100	
Spacing	s_{min} ∥	[mm]	75	
	s_{cr} ∥	[mm]	250	
	s_{min} ⊥ = s_{cr} ⊥	[mm]	250	
Drilling method				
Hammer drilling with hard metal hammer drill				

[1)] The compressive strength of the single brick must not be less than 80% of the mean compressive strength.

Table C94.2: Group factors

Anchor rod			**M6**	**M8**
Perforated sleeve FIS H K			**12x50**	
Group factors	$\alpha_{g,N}$ (s_{min} ∥)	[-]	1,6	
	$\alpha_{g,V}$ (s_{min} ∥)	[-]	1,1	
	$\alpha_{g,N}$ (s_{min} ⊥)	[-]	2,0	
	$\alpha_{g,V}$ (s_{min} ⊥)	[-]		

fischer injection system FIS V Plus for masonry

Performance
Horizontal perforated brick LLz, dimensions, installation parameters

Annex C 94

Horizontal perforated brick LLz, EN 771-1:2011+A1:2015

Table C95.1: Characteristic resistance to pull-out failure or brick breakout failure of a single anchor under tension loading

Anchor rod		**M6**	**M8**
Perforated sleeve FIS H K		**12x50**	
Tension resistance $N_{Rk} = N_{Rk,p} = N_{Rk,b} = N_{Rk,p,c} = N_{Rk,b,c}$ [kN] depending on the mean compressive strength f_b; Installation and use condition w/w, w/d, d/d; (temperature range 50/80°C)[2)]			
Mean compressive strength / Min. compressive strength single brick [1)]	Use con-ditions		
2,5 / 2 N/mm²	w/w w/d	0,5	
	d/d	0,6	
5 / 4 N/mm²	w/w w/d	0,9	
	d/d	1,2	
8 / 6 N/mm²	w/w w/d	1,5	
	d/d	1,5	

1) The compressive strength of the single brick must not be less than 80% of the mean compressive strength.
2) For temperature range 72/120°C: $N_{Rk\,(72/120°C)} = 0{,}83 \cdot N_{Rk\,(50/80°C)}$.

Table C95.2: Characteristic resistance to local brick failure or brick edge failure of a single anchor under shear loading

Anchor rod		**M6**	**M8**
Perforated sleeve FIS H K		**12x50**	
Shear resistance $V_{Rk} = V_{Rk,b} = V_{Rk,c,II} = V_{Rk,c,\perp}$ [kN] depending on the mean compressive strength f_b; Installation and use condition w/w, w/d, d/d; (temperature range 50/80°C and 72/120°C)			
Mean compressive strength / Min. compressive strength single brick [1)]	Use con-ditions		
2,5 / 2 N/mm²	w/w w/d	0,5	
	d/d		
5 / 4 N/mm²	w/w w/d	0,9	
	d/d		
8 / 6 N/mm²	w/w w/d	1,5	
	d/d		

1) The compressive strength of the single brick must not be less than 80% of the mean compressive strength.

Factor for job site tests and displacements see annex C 123.

Horizontal perforated brick LLz, EN 771-1:2011+A1:2015

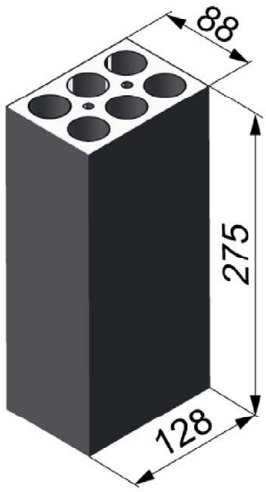

Producer		e.g. Cermanica Farreny S.A.		
Nominal dimensions	[mm]	length L	width W	height H
		275	88	128
Mean gross dry density ρ	[kg/dm³]	≥ 0,8		
Mean compressive strength / Min. compressive strength single brick [1)]	[N/mm²]	2,5 / 2		
Standard or annex		EN 771-1:2011+A1:2015		

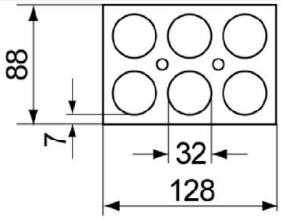

Dimension see also Annex B 19

Table C96.1: Installation parameters

Anchor rod			M6	M8
Perforated sleeve FIS H K			**12x50**	
Anchor rod with perforated sleeve FIS H K				
Max. installation torque	T_{inst}	[Nm]	2	
General installation parameters				
Edge distance	$c_{min} = c_{cr}$	[mm]	60	
Spacing	s_{min} ∥	[mm]	75	
	s_{cr} ∥	[mm]	275	
	s_{min} ⊥	[mm]	75	
	s_{cr} ⊥	[mm]	130	
Drilling method				
Hammer drilling with hard metal hammer drill				

[1)] The compressive strength of the single brick must not be less than 80% of the mean compressive strength.

Table C96.2: Group factors

Anchor rod			M6	M8
Perforated sleeve FIS H K			**12x50**	
Group factors	$\alpha_{g,N}$ (s_{min} ∥)	[-]	1,3	
	$\alpha_{g,V}$ (s_{min} ∥)	[-]	1,5	
	$\alpha_{g,N}$ (s_{min} ⊥)	[-]	1,3	
	$\alpha_{g,V}$ (s_{min} ⊥)	[-]	1,5	

fischer injection system FIS V Plus for masonry

Performance
Horizontal perforated brick LLz, dimensions, installation parameters

Annex C 96

Horizontal perforated brick LLz, EN 771-1:2011+A1:2015

Table C97.1: Characteristic resistance to pull-out failure or brick breakout failure of a single anchor under tension loading

Anchor rod		**M6**	**M8**
Perforated sleeve FIS H K		**12x50**	
Tension resistance $N_{Rk} = N_{Rk,p} = N_{Rk,b} = N_{Rk,p,c} = N_{Rk,b,c}$ [kN] depending on the mean compressive strength f_b; Installation and use condition w/w, w/d, d/d; (temperature range 50/80°C) [2)]			
Mean compressive strength / Min. compressive strength single brick [1)]	Use con-ditions		
2,5 / 2 N/mm²	w/w, w/d, d/d	1,5	

[1)] The compressive strength of the single brick must not be less than 80% of the mean compressive strength.
[2)] For temperature range 72/120°C: $N_{Rk\,(72/120°C)} = 0{,}83 \cdot N_{Rk\,(50/80°C)}$.

Table C97.2: Characteristic resistance to local brick failure or brick edge failure of a single anchor under shear loading

Anchor rod		**M6**	**M8**
Perforated sleeve FIS H K		**12x50**	
Shear resistance $V_{Rk} = V_{Rk,b} = V_{Rk,c,II} = V_{Rk,c,\perp}$ [kN] depending on the mean compressive strength f_b; Installation and use condition w/w, w/d, d/d; (temperature range 50/80°C and 72/120°C)			
Mean compressive strength / Min. compressive strength single brick [1)]	Use con-ditions		
2,5 / 2 N/mm²	w/w, w/d, d/d	1,2	

[1)] The compressive strength of the single brick must not be less than 80% of the mean compressive strength.

Factor for job site tests and displacements see annex C123.

Light-weight concrete hollow block Hbl, EN 771-3:2011+A1:2015

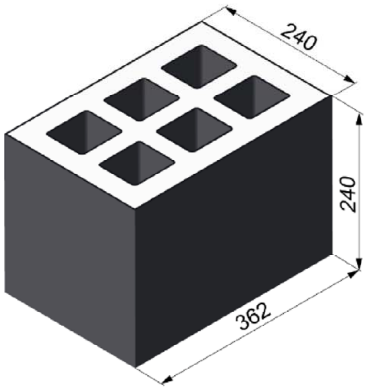

Producer		-		
Nominal dimensions	[mm]	length L	width W	height H
		362	240	240
Mean gross dry density ρ	[kg/dm³]	≥ 1,0		
Mean compressive strength / Min. compressive strength single brick [1)]	[N/mm²]	2,5 / 2 or 5 / 4		
Standard or annex		EN 771-3:2011+A1:2015		

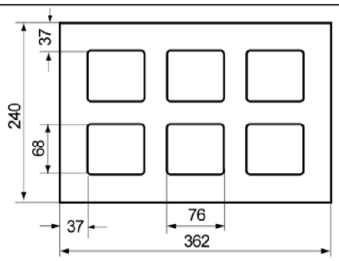

Dimension see also Annex B 19

Table C98.1: Installation parameters
(Pre-positioned anchorage with perforated sleeve FIS H K)

Anchor rod	M6	M8	M6	M8	-	M8	M10	M8	M10	-	M12	M16	M12	M16	M12	M16
Internal threaded anchor FIS E	-		-		M6 M8 **11x85**	-		-		M10 M12 **15x85**	-		-		-	
Perforated sleeve FIS H K	**12x50**		**12x85**		**16x85**			**16x130**		**20x85**			**20x130**		**20x200**	

Anchor rod and internal threaded anchor FIS E with perforated sleeve FIS H K			
Max. installation torque	max T_{inst}	[Nm]	2
General installation parameters			
Edge distance	$c_{min} = c_{cr}$	[mm]	60
Spacing	s_{min} ∥	[mm]	100
	s_{cr} ∥	[mm]	362
	s_{min} ⊥ = s_{cr} ⊥	[mm]	240
Drilling method			
Hammer drilling with hard metal hammer drill			

[1)] The compressive strength of the single brick must not be less than 80% of the mean compressive strength.

Table C98.2: Group factors

Anchor rod	M6	M8	M6	M8	-	M8	M10	M8	M10	-	M12	M16	M12	M16	M12	M16
Internal threaded anchor FIS E	-		-		M6 M8 **11x85**	-		-		M10 M12 **15x85**	-		-		-	
Perforated sleeve FIS H K	**12x50**		**12x85**		**16x85**			**16x130**		**20x85**			**20x130**		**20x200**	

Group factors	$\alpha_{g,N}$ (s_{min} ∥)	[-]	1,2
	$\alpha_{g,V}$ (s_{min} ∥)	[-]	1,1
	$\alpha_{g,N}$ (s_{min} ⊥)	[-]	2,0
	$\alpha_{g,V}$ (s_{min} ⊥)	[-]	

fischer injection system FIS V Plus for masonry

Performance
Light-weight concrete hollow block Hbl, dimensions, installation parameters

Annex C 98

Light-weight concrete hollow block Hbl, EN 771-3:2011+A1:2015

Table C99.1: Installation parameters
(Push through anchorage with perforated sleeve FIS H K)

Anchor rod			**M10**	**M12**	**M16**
Perforated sleeve FIS H K			**18x130/200**		**22x130/200**
Anchor rod with perforated sleeve FIS H K					
Max. installation torque	max T_{inst}	[Nm]	2		
General installation parameters					
Edge distance	$c_{min} = c_{cr}$	[mm]	60		
Spacing	s_{min} ll	[mm]	100		
	s_{cr} ll	[mm]	362		
	$s_{min} \perp = s_{cr} \perp$	[mm]	240		
Drilling method					
Hammer drilling with hard metal hammer drill					

Table C99.2: Group factors

Anchor rod			**M10**	**M12**	**M16**
Perforated sleeve FIS H K			**18x130/200**		**22x130/200**
Group factors	$\alpha_{g,N}$ (s_{min} ll)	[-]	1,2		
	$\alpha_{g,V}$ (s_{min} ll)	[-]	1,1		
	$\alpha_{g,N}$ ($s_{min} \perp$)	[-]	2,0		
	$\alpha_{g,V}$ ($s_{min} \perp$)	[-]			

fischer injection system FIS V Plus for masonry

Performance
Light-weight concrete hollow block Hbl, dimensions, installation parameters

Annex C 99

Light-weight concrete hollow block Hbl, EN 771-3:2011+A1:2015

Table C100.1: Characteristic resistance to pull-out failure or brick breakout failure of a single anchor under tension loading (Pre-positioned anchorage)

Anchor rod	**M6**	**M8**	**M6**	**M8**	**-**		**M8**	**M10**	**M8**	**M10**	**-**		**M12**	**M16**	**M12**	**M16**	**M12**	**M16**
Internal threaded anchor FIS E	**-**		**-**		**M6**	**M8**	**-**		**-**		**M10**	**M12**	**-**		**-**		**-**	
					11x85						**15x85**							
Perforated sleeve FIS H K	**12x50**		**12x85**		**16x85**				**16x130**		**20x85**				**20x130**		**20x200**	

Tension resistance $N_{Rk} = N_{Rk,p} = N_{Rk,b} = N_{Rk,p,c} = N_{Rk,b,c}$ [kN] depending on the mean compressive strength f_b; Installation and use condition w/w, w/d, d/d; (temperature range 50/80°C)[2)]

Mean compressive strength / Min. compressive strength single brick [1)]	Use con-ditions				
2,5 / 2 N/mm²	w/w	w/d	1,2	1,5	2,5
	d/d		1,2	1,5	2,5
5 / 4 N/mm²	w/w	w/d	2,0	3,0	5,0
	d/d		2,5	3,0	5,5

1) The compressive strength of the single brick must not be less than 80% of the mean compressive strength.
2) For temperature range 72/120°C: $N_{Rk\,(72/120°C)} = 0{,}83 \cdot N_{Rk\,(50/80°C)}$.

Table C100.2: Characteristic resistance to pull-out failure or brick breakout failure of a single anchor under tension loading (Push through anchorage)

Anchor rod	**M10**	**M12**	**M16**
Perforated sleeve FIS H K	**18x130/200**		**22x130/200**

Tension resistance $N_{Rk} = N_{Rk,p} = N_{Rk,b} = N_{Rk,p,c} = N_{Rk,b,c}$ [kN] depending on the mean compressive strength f_b; Installation and use condition w/w, w/d, d/d; (temperature range 50/80°C)[2)]

Mean compressive strength / Min. compressive strength single brick [1)]	Use con-ditions		
2,5 / 2 N/mm²	w/w	w/d	1,5
	d/d		1,5
5 / 4 N/mm²	w/w	w/d	3,0
	d/d		3,0

1) The compressive strength of the single brick must not be less than 80% of the mean compressive strength.
2) For temperature range 72/120°C: $N_{Rk\,(72/120°C)} = 0{,}83 \cdot N_{Rk\,(50/80°C)}$.

Factor for job site tests and displacements see annex C123.

fischer injection system FIS V Plus for masonry

Performance
Light-weight concrete hollow block Hbl, Characteristic resistance under tension loading

Annex C 100

Light-weight concrete hollow block Hbl, EN 771-3:2011+A1:2015

Table C101.1: Characteristic resistance to local brick failure or brick edge failure of a single anchor under shear loading (Pre-positioned anchorage)

Anchor rod	**M6**	**M8**	**M6**	**M8**	**-**	**M8**	**M10**	**M8**	**M10**	**-**	**M12**	**M16**	**M12**	**M16**	**M12**	**M16**
Internal threaded anchor FIS E	**-**		**-**		**M6**	**M8**	**-**	**-**		**M10**	**M12**	**-**	**-**		**-**	
					11x85					**15x85**						
Perforated sleeve FIS H K	**12x50**		**12x85**		**16x85**			**16x130**		**20x85**			**20x130**		**20x200**	

Shear resistance $V_{Rk} = V_{Rk,b} = V_{Rk,c,II} = V_{Rk,c,\perp}$ [kN] depending on the mean compressive strength f_b; Installation and use condition w/w, w/d, d/d; (temperature range 50/80°C and 72/120°C)

Mean compressive strength / Min. compressive strength single brick [1]	Use con-ditions	
2,5 / 2 N/mm²	w/w, w/d	0,9
	d/d	
5 / 4 N/mm²	w/w, w/d	2,0
	d/d	

[1] The compressive strength of the single brick must not be less than 80% of the mean compressive strength.

Table C101.2: Characteristic resistance to local brick failure or brick edge failure of a single anchor under shear loading (Push through anchorage)

Anchor rod	**M10**	**M12**	**M16**
Perforated sleeve FIS H K	**18x130/200**		**22x130/200**

Shear resistance $V_{Rk} = V_{Rk,b} = V_{Rk,c,II} = V_{Rk,c,\perp}$ [kN] depending on the mean compressive strength f_b; Installation and use condition w/w, w/d, d/d; (temperature range 50/80°C and 72/120°C)

Mean compressive strength / Min. compressive strength single brick [1]	Use con-ditions	
2,5 / 2 N/mm²	w/w, w/d	0,9
	d/d	
5 / 4 N/mm²	w/w, w/d	2,0
	d/d	

[1] The compressive strength of the single brick must not be less than 80% of the mean compressive strength.

Factor for job site tests and displacements see annex C 123.

Light-weight concrete hollow block Hbl, EN 771-3:2011+A1:2015

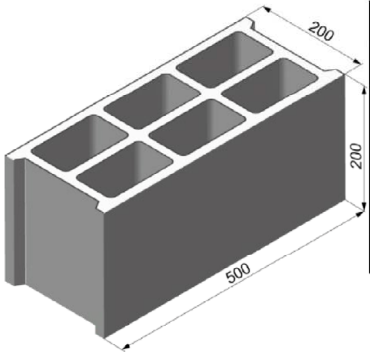

Producer		e.g. Sepa		
Nominal dimensions	[mm]	length L	width W	height H
		500	200	200
Mean gross dry density ρ	[kg/dm³]	≥ 1,0		
Mean compressive strength / Min. compressive strength single brick [1)]	[N/mm²]	2,5 / 2 or 5 / 4 or 8 / 6		
Standard or annex		EN 771-1:2011+A1:2015		

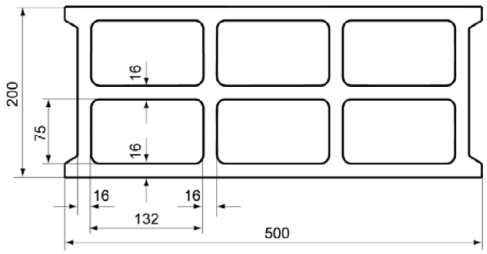

Dimension see also Annex B 19

Table C102.1: Installation parameters

Anchor rod	M6	M8	M6	M8	-	M8	M10	M8	M10	M10	M12	-	M12	M16
Internal threaded anchor FIS E	-		-		M6 / M8 11x85	-		-		-		M10 / M12 15x85	-	
Perforated sleeve FIS H K	12x50		12x85		16x85			16x130		18x130/200		20x85		

Anchor rod and internal threaded anchor FIS E with perforated sleeve FIS H K			
Max. installation torque	max T_{inst}	[Nm]	1 / 2
General installation parameters			
Edge distance	$c_{min} = c_{cr}$	[mm]	100
Spacing	s_{min} ∥ = s_{cr} ∥	[mm]	500
	s_{min} ⊥ = s_{cr} ⊥	[mm]	200
Drilling method			
Hammer drilling with hard metal hammer drill			

1) The compressive strength of the single brick must not be less than 80% of the mean compressive strength.

Table C102.2: Group factors

Anchor rod	M6	M8	M6	M8	-	M8	M10	M8	M10	M10	M12	-	M12	M16
Internal threaded anchor FIS E	-		-		M6 / M8 11x85	-		-		-		M10 / M12 15x85	-	
Perforated sleeve FIS H K	12x50		12x85		16x85			16x130		18x130/200		20x85		

Group factors	$\alpha_{g,N}$ (s_{min} ∥)	[-]	2
	$\alpha_{g,V}$ (s_{min} ∥)	[-]	2
	$\alpha_{g,N}$ (s_{min} ⊥)	[-]	2
	$\alpha_{g,V}$ (s_{min} ⊥)	[-]	2

fischer injection system FIS V Plus for masonry

Performance
Light-weight concrete hollow block Hbl, dimensions, installation parameters

Annex C 102

Light-weight concrete hollow block Hbl, EN 771-3:2011+A1:2015

Table C103.1: Characteristic resistance to pull-out failure or brick breakout failure of a single anchor under tension loading

Anchor rod	**M6**	**M8**	**M6**	**M8**	**-**	**M8**	**M10**	**M8**	**M10**	**M10**	**M12**	**-**	**M12**	**M16**
Internal threaded anchor FIS E	-		-		**M6 M8** 11x85	-		-		-		**M10 M12** 15x85	-	
Perforated sleeve FIS H K	**12x50**		**12x85**		**16x85**			**16x130**		**18x130/200**		**20x85**		

Tension resistance $N_{Rk} = N_{Rk,p} = N_{Rk,b} = N_{Rk,p,c} = N_{Rk,b,c}$ [kN] depending on the mean compressive strength f_b; Installation and use condition w/w, w/d, d/d; (temperature range 50/80°C) [2)]		
Mean compressive strength / Min. compressive strength single brick [1)]	use conditions	
2,5 / 2 N/mm²	w/w w/d	0,4
	d/d	0,5
5 / 4 N/mm²	w/w w/d	0,9
	d/d	0,9
8 / 6 N/mm²	w/w w/d	1,2
	d/d	1,5

1) The compressive strength of the single brick must not be less than 80% of the mean compressive strength.
2) For temperature range 72/120°C: $N_{Rk\,(72/120°C)} = 0{,}83 \cdot N_{Rk\,(50/80°C)}$.

Table C103.2: Characteristic resistance to local brick failure or brick edge failure of a single anchor under shear loading

Anchor rod	**M6**	**M8**	**M6**	**M8**	**-**	**M8**	**M10**	**M8**	**M10**	**M10**	**M12**	**-**	**M12**	**M16**
Internal threaded anchor FIS E	-		-		**M6 M8** 11x85	-		-		-		**M10 M12** 15x85	-	
Perforated sleeve FIS H K	**12x50**		**12x85**		**16x85**			**16x130**		**18x130/200**		**20x85**		

Shear resistance $V_{Rk} = V_{Rk,b} = V_{Rk,c,II} = V_{Rk,c,\perp}$ [kN] depending on the mean compressive strength f_b; Installation and use condition w/w, w/d, d/d; (temperature range 50/80°C and 72/120°C)		
Mean compressive strength / Min. compressive strength single brick [1)]	Use conditions	
2,5 / 2 N/mm²	w/w w/d	0,9
	d/d	
5 / 4 N/mm²	w/w w/d	1,5
	d/d	
8 / 6 N/mm²	w/w w/d	2,5
	d/d	

1) The compressive strength of the single brick must not be less than 80% of the mean compressive strength.

Factor for job site tests and displacements see annex C 123.

fischer injection system FIS V Plus for masonry	**Annex C 103**
Performance Light-weight concrete hollow block Hbl, Characteristic resistance under tension and shear loading	

Light-weight concrete hollow block Hbl, EN 771-3:2011+A1:2015

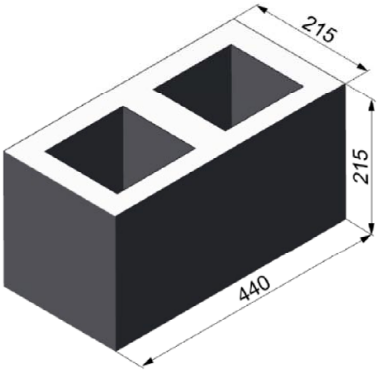

Producer		e.g. Roadstone wood		
Nominal dimensions	[mm]	length L	width W	height H
		440	215	215
Mean gross dry density ρ	[kg/dm³]	≥ 1,2		
Mean compressive stren-gth / Min. compressive strength single brick [1)]	[N/mm²]	5 / 4 or 8 / 6 or 10 / 8 or 12,5 / 10		
Standard or annex		EN 771-3:2011+A1:2015		

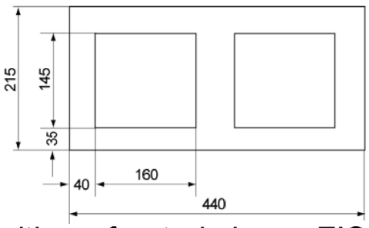

Dimension see also Annex B 20

Table C104.1: Installation parameters
(Pre-positioned anchorage with perforated sleeve FIS H K)

Anchor rod	**M6**	**M8**	**M6**	**M8**	**-**		**M8**	**M10**	**M8**	**M10**	**-**		**M12**	**M16**	**M12**	**M16**
Internal threaded anchor FIS E	**-**		**-**		**M6**	**M8**	**-**		**-**		**M10**	**M12**	**-**		**-**	
					11x85						**15x85**					
Perforated sleeve FIS H K	**12x50**		**12x85**		**16x85**				**16x130**		**20x85**				**20x130**	
Anchor rod and internal threaded anchor FIS E with perforated sleeve FIS H K																
Max. installation torque max T_{inst} [Nm]	2															
General installation parameters																
Edge distance $c_{min} = c_{cr}$ [mm]	110															
Spacing s_{min} ∥ [mm]	100															
Spacing s_{cr} ∥ [mm]	440															
Spacing s_{min} ⊥ [mm]	100															
Spacing s_{cr} ⊥ [mm]	215															
Drilling method																
Hammer drilling with hard metal hammer drill																

1) The compressive strength of the single brick must not be less than 80% of the mean compressive strength.

Table C104.2: Group factors

Anchor rod	**M6**	**M8**	**M6**	**M8**	**-**		**M8**	**M10**	**M8**	**M10**	**-**		**M12**	**M16**	**M12**	**M16**
Internal threaded anchor FIS E	**-**		**-**		**M6**	**M8**	**-**		**-**		**M10**	**M12**	**-**		**-**	
					11x85						**15x85**					
Perforated sleeve FIS H K	**12x50**		**12x85**		**16x85**				**16x130**		**20x85**				**20x130**	
Group factors $\alpha_{g,N}$ (s_{min} ∥) [-]	1,4															
Group factors $\alpha_{g,V}$ (s_{min} ∥) [-]	2,0															
Group factors $\alpha_{g,N}$ (s_{min} ⊥) [-]	1,4															
Group factors $\alpha_{g,V}$ (s_{min} ⊥) [-]	1,2															

fischer injection system FIS V Plus for masonry

Performance
Light-weight concrete hollow block Hbl, dimensions, installation parameters

Annex C 104

Light-weight concrete hollow block Hbl, EN 771-3:2011+A1:2015

Table C105.1: Installation parameters
(Push through anchorage with perforated sleeve FIS H K)

Anchor rod			**M10**	**M12**	**M16**
Perforated sleeve FIS H K			**18x130/200**		**22x130/200**
Anchor rod with perforated sleeve FIS H K					
Max. installation torque	max T_{inst}	[Nm]	2		
General installation parameters					
Edge distance	$c_{min} = c_{cr}$	[mm]	110		
Spacing	s_{min} ll		100		
	s_{cr} ll		440		
	s_{min} ⊥		100		
	s_{cr} ⊥		215		
Drilling method					
Hammer drilling with hard metal hammer drill					

Table C105.2: Group factors

Anchor rod			**M10**	**M12**	**M16**
Perforated sleeve FIS H K			**18x130/200**		**22x130/200**
Group factors	$\alpha_{g,N}$ (s_{min} ll)	[-]	1,4		
	$\alpha_{g,V}$ (s_{min} ll)		2,0		
	$\alpha_{g,N}$ (s_{min} ⊥)		1,4		
	$\alpha_{g,V}$ (s_{min} ⊥)		1,2		

fischer injection system FIS V Plus for masonry

Performance
Light-weight concrete hollow block Hbl, dimensions, installation parameters

Annex C 105

Light-weight concrete hollow block Hbl, EN 771-3:2011+A1:2015

Table C106.1: Characteristic resistance to pull-out failure or brick breakout failure of a single anchor under tension loading (Pre-positioned anchorage)

Anchor rod	**M6**	**M8**	**M6**	**M8**	**-**		**M8**	**M10**	**M8**	**M10**	**M10**	**M12**	**-**		**M12**	**M16**
Internal threaded anchor FIS E	**-**		**-**		**M6**	**M8**	**-**		**-**		**-**		**M10**	**M12**	**-**	
					11x85								**15x85**			
Perforated sleeve FIS H K	**12x50**		**12x85**		**16x85**				**16x130**		**18x130/200**		**20x85**			

Tension resistance $N_{Rk} = N_{Rk,p} = N_{Rk,b} = N_{Rk,p,c} = N_{Rk,b,c}$ [kN] depending on the mean compressive strength f_b; Installation and use condition w/w, w/d, d/d; (temperature range 50/80°C) [2]

Mean compressive strength / Min. compressive strength single brick [1]	Use conditions			
5 / 4 N/mm²	w/w w/d	0,9	1,2	2,0
	d/d	1,2	1,5	2,0
8 / 6 N/mm²	w/w w/d	1,5	2,0	3,0
	d/d	1,5	2,0	3,0
10 / 8 N/mm²	w/w w/d	2,0	2,5	3,5
	d/d	2,0	3,0	4,0
12,5 / 10 N/mm²	w/w w/d	2,5	3,0	4,5
	d/d	3,0	3,5	5,0

[1] The compressive strength of the single brick must not be less than 80% of the mean compressive strength.
[2] For temperature range 72/120°C: $N_{Rk\,(72/120°C)} = 0{,}83 \cdot N_{Rk\,(50/80°C)}$.

Table C106.2: Characteristic resistance to pull-out failure or brick breakout failure of a single anchor under tension loading (Push through anchorage)

Anchor rod	**M10**	**M12**	**M16**
Perforated sleeve FIS H K	**18x130/200**		**22x130/200**

Tension resistance $N_{Rk} = N_{Rk,p} = N_{Rk,b} = N_{Rk,p,c} = N_{Rk,b,c}$ [kN] depending on the mean compressive strength f_b; Installation and use condition w/w, w/d, d/d; (temperature range 50/80°C) [2]

Mean compressive strength / Min. compressive strength single brick [1]	Use conditions		
5 / 4 N/mm²	w/w w/d	1,2	2,0
	d/d	1,5	2,0
8 / 6 N/mm²	w/w w/d	2,0	3,0
	d/d	2,0	3,0
10 / 8 N/mm²	w/w w/d	2,5	3,5
	d/d	3,0	4,0
12,5 / 10 N/mm²	w/w w/d	3,0	4,5
	d/d	3,5	5,0

[1] The compressive strength of the single brick must not be less than 80% of the mean compressive strength.
[2] For temperature range 72/120°C: $N_{Rk\,(72/120°C)} = 0{,}83 \cdot N_{Rk\,(50/80°C)}$.
Factor for job site tests and displacements see annex C 123.

fischer injection system FIS V Plus for masonry

Performance
Light-weight concrete hollow block Hbl, Characteristic resistance under tension loading

Annex C 106

Light-weight concrete hollow block Hbl, EN 771-3:2011+A1:2015

Table C107.1: Characteristic resistance to local brick failure or brick edge failure of a single anchor under shear loading (Pre-positioned anchorage)

Anchor rod	**M6**	**M8**	**M6**	**M8**	**-**	**M8**	**M10**	**M8**	**M10**	**-**	**M12**	**M16**	**M12**	**M16**
Internal threaded anchor FIS E	**-**		**-**		**M6 / M8** 11x85	**-**		**-**		**M10 / M12** 15x85	**-**		**-**	
Perforated sleeve FIS H K	**12x50**		**12x85**		**16x85**			**16x130**		**20x85**			**20x130**	

Shear resistance $V_{Rk} = V_{Rk,b} = V_{Rk,c,II} = V_{Rk,c,\perp}$ [kN] depending on the mean compressive strength f_b; Installation and use condition w/w, w/d, d/d; (temperature range 50/80°C and 72/120°C)

Mean compressive strength / Min. compressive strength single brick [1]	Use con-ditions						
5 / 4 N/mm²	w/w, w/d, d/d	0,75	1,20	0,75	1,20	0,75	1,20
8 / 6 N/mm²	w/w, w/d, d/d	1,20	2,00	1,20	2,00	1,20	2,00
10 / 8 N/mm²	w/w, w/d, d/d	1,50	2,50	1,50	2,50	1,50	2,50
12,5 / 10 N/mm²	w/w, w/d, d/d	2,00	3,00	2,00	3,00	2,00	3,00

[1] The compressive strength of the single brick must not be less than 80% of the mean compressive strength.

Table C107.2: Characteristic resistance to local brick failure or brick edge failure of a single anchor under shear loading (Push through anchorage)

Anchor rod	**M10**	**M12**	**M16**
Perforated sleeve FIS H K	**18x130/200**		**22x130/200**

Shear resistance $V_{Rk} = V_{Rk,b} = V_{Rk,c,II} = V_{Rk,c,\perp}$ [kN] depending on the mean compressive strength f_b; Installation and use condition w/w, w/d, d/d; (temperature range 50/80°C and 72/120°C)

Mean compressive strength / Min. compressive strength single brick [1]	Use con-ditions	
5 / 4 N/mm²	w/w, w/d, d/d	1,2
8 / 6 N/mm²	w/w, w/d, d/d	2,0
10 / 8 N/mm²	w/w, w/d, d/d	2,5
12,5 / 10 N/mm²	w/w, w/d, d/d	3,0

[1] The compressive strength of the single brick must not be less than 80% of the mean compressive strength.

Factor for job site tests and displacements see annex C 123.

fischer injection system FIS V Plus for masonry

Performance
Light-weight concrete hollow block Hbl, Characteristic resistance under shear loading

Annex C 107

Light-weight concrete solid block Vbl, EN 771-3:2011+A1:2015

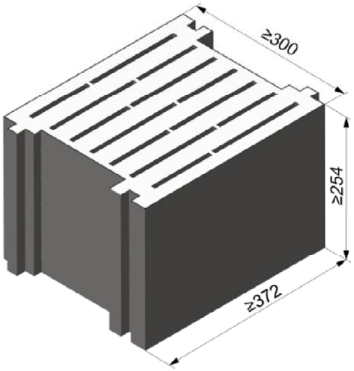

Producer		e.g. Sepa		
Nominal dimensions	[mm]	length L	width W	height H
		≥ 372	≥ 300	≥ 254
Mean gross dry density ρ	[kg/dm³]	≥ 0,6		
Mean compressive strength / Min. compressive strength single brick [1)]	[N/mm²]	2,5 / 2		
Standard or annex		EN 771-3:2011+A1:2015		

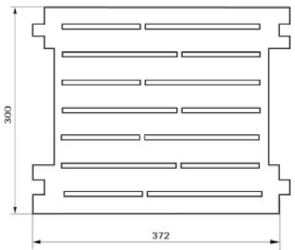

Dimension see also Annex B 20

Table C108.1: Installation parameters

Anchor rod			M8	M10	M10	M12	M12	M16	M16	M12	M16
Perforated sleeve FIS H K			**16x130**		**18x130/200**		**20x130**		**22x130/200**	**20x200**	
Anchor rod with perforated sleeve FIS H K											
Max. installation torque	max T_{inst}	[Nm]	4								
General installation parameters											
Edge distance	$c_{min} = c_{cr}$	[mm]	130								
Spacing	s_{min} II = s_{cr} II	[mm]	370								
	s_{min} ⊥ = s_{cr} ⊥	[mm]	250								
Drilling method											
Hammer drilling with hard metal hammer drill											

[1)] The compressive strength of the single brick must not be less than 80% of the mean compressive strength.

Table C108.2: Group factors

Anchor rod			M8	M10	M10	M12	M12	M16	M16	M12	M16
Perforated sleeve FIS H K			**16x130**		**18x130/200**		**20x130**		**22x130/200**	**20x200**	
Group factors	$\alpha_{g,N}$ (s_{min} II)	[-]	2								
	$\alpha_{g,V}$ (s_{min} II)	[-]	2								
	$\alpha_{g,N}$ (s_{min} ⊥)	[-]	2								
	$\alpha_{g,V}$ (s_{min} ⊥)	[-]	2								

fischer injection system FIS V Plus for masonry

Performance
Light-weight concrete solid block Vbl, dimensions, installation parameters

Annex C 108

Light-weight concrete solid block Vbl, EN 771-3:2011+A1:2015

Table C109.1: Characteristic resistance to pull-out failure or brick breakout failure of a single anchor under tension loading

Anchor rod		**M8**	**M10**	**M10**	**M12**	**M12**	**M16**	**M16**	**M12**	**M16**
Perforated sleeve FIS H K		**16x130**		**18x130/200**		**20x130**		**22x130/200**	**20x200**	
Tension resistance $N_{Rk} = N_{Rk,p} = N_{Rk,b} = N_{Rk,p,c} = N_{Rk,b,c}$ [kN] depending on the mean compressive strength f_b; Installation and use condition w/w, w/d, d/d; (temperature range 50/80°C) [2)]										
Mean compressive strength / Min. compressive strength single brick [1)]	Use conditions									
2,5 / 2 N/mm²	w/w w/d	2,0				2,5			3,0	
	d/d	2,0				3,0			4,0	

[1)] The compressive strength of the single brick must not be less than 80% of the mean compressive strength.
[2)] For temperature range 72/120°C: $N_{Rk\,(72/120°C)} = 0{,}83 \cdot N_{Rk\,(50/80°C)}$.

Table C109.2: Characteristic resistance to local brick failure or brick edge failure of a single anchor under shear loading

Anchor rod		**M8**	**M10**	**M10**	**M12**	**M12**	**M16**	**M16**	**M12**	**M16**
Perforated sleeve FIS H K		**16x130**		**18x130/200**		**20x130**		**22x130/200**	**20x200**	
Shear resistance $V_{Rk} = V_{Rk,b} = V_{Rk,c,II} = V_{Rk,c,\perp}$ [kN] depending on the mean compressive strength f_b; Installation and use condition w/w, w/d, d/d; (temperature range 50/80°C and 72/120°C)										
Mean compressive strength / Min. compressive strength single brick [1)]	Use conditions									
2,5 / 2 N/mm²	w/w w/d	4,5						6,5		
	d/d									

[1)] The compressive strength of the single brick must not be less than 80% of the mean compressive strength.

Factor for job site tests and displacements see annex C 123.

fischer injection system FIS V Plus for masonry

Performance
Light-weight concrete solid block Vbl,
Characteristic resistance under tension and shear loading

Annex C 109

Light-weight concrete solid block Vbl, EN 771-3:2011+A1:2015

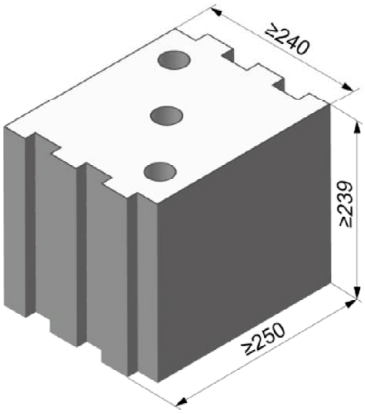

Producer		KLB		
Nominal dimensions	[mm]	length L	width W	height H
		≥ 250	≥ 240	≥ 239
Mean gross dry density ρ	[kg/dm³]	≥ 1,6		
Mean compressive stren-gth / Min. compressive strength single brick [1)]	[N/mm²]	5 / 4 or 8 / 6 or 10 / 8		
Standard or annex		EN 771-3:2011+A1:2015		

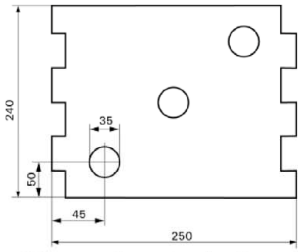

Dimension see also Annex B 20

Table C110.1: Installation parameters
(Pre-positioned anchorage with perforated sleeve FIS H K)

Anchor rod	M6	M8	M6	M8	-	M8	M10	M8	M10	-	M12	M16	M12	M16	M12	M16
Internal threaded anchor FIS E	-		-		M6 M8 11x85	-		-		M10 M12 15x85	-		-		-	
Perforated sleeve FIS H K	12x50		12x85		16x85			16x130		20x85			20x130		20x200	

Anchor rod and internal threaded anchor FIS E with perforated sleeve FIS H K			
Max. installation torque	max T_{inst}	[Nm]	4
General installation parameters			
Edge distance	$c_{min} = c_{cr}$	[mm]	130
Spacing	s_{min} ∥ = s_{cr} ∥	[mm]	250
	s_{min} ⊥ = s_{cr} ⊥	[mm]	250
Drilling method			
Hammer drilling with hard metal hammer drill			

[1)] The compressive strength of the single brick must not be less than 80% of the mean compressive strength.

Table C110.2: Group factors

Anchor rod	M6	M8	M6	M8	-	M8	M10	M8	M10	-	M12	M16	M12	M16	M12	M16
Internal threaded anchor FIS E	-		-		M6 M8 11x85	-		-		M10 M12 15x85	-		-		-	
Perforated sleeve FIS H K	12x50		12x85		16x85			16x130		20x85			20x130		20x200	

Group factors	$\alpha_{g,N}$ (s_{min} ∥)	[-]	2,0
	$\alpha_{g,V}$ (s_{min} ∥)		
	$\alpha_{g,N}$ (s_{min} ⊥)		
	$\alpha_{g,V}$ (s_{min} ⊥)		

fischer injection system FIS V Plus for masonry

Performance
Light-weight concrete solid block Vbl, dimensions, installation parameters

Annex C 110

Light-weight concrete solid block Vbl, EN 771-3:2011+A1:2015

Table C111.1: Installation parameters
(Push through anchorage with perforated sleeve FIS H K)

Anchor rod			**M10**	**M12**	**M16**
Perforated sleeve FIS H K			**18x130/200**		**22x130/200**
Anchor rod with perforated sleeve FIS H K					
Max. installation torque	max T_{inst}	[Nm]	2,0		
General installation parameters					
Edge distance	$c_{min} = c_{cr}$	[mm]	130		
Spacing	s_{min} II = s_{cr} II	[mm]	250		
	s_{min} ⊥ = s_{cr} ⊥	[mm]	250		
Drilling method					
Hammer drilling with hard metal hammer drill					

Table C111.2: Group factors

Anchor rod			**M10**	**M12**	**M16**
Perforated sleeve FIS H K			**18x130/200**		**22x130/200**
Group factors	$\alpha_{g,N}$ (s_{min} II)	[-]	2,0		
	$\alpha_{g,V}$ (s_{min} II)	[-]	2,0		
	$\alpha_{g,N}$ (s_{min} ⊥)	[-]	2,0		
	$\alpha_{g,V}$ (s_{min} ⊥)	[-]	2,0		

fischer injection system FIS V Plus for masonry

Performance
Light-weight concrete solid block Vbl, dimensions, installation parameters

Annex C 111

Light-weight concrete solid block Vbl, EN 771-3:2011+A1:2015

Table C112.1: Characteristic resistance to pull-out failure or brick breakout failure of a single anchor under tension loading (Pre-positioned anchorage)

Anchor rod		**M6**	**M8**	**M6**	**M8**	**-**	**M8**	**M10**	**M8**	**M10**	**-**	**M12**	**M16**	**M12**	**M16**	**M12**	**M16**
Internal threaded anchor FIS E		**-**		**-**		**M6 M8** **11x85**	**-**		**-**		**M10 M12** **15x85**	**-**		**-**		**-**	
Perforated sleeve FIS H K		**12x50**		**12x85**		**16x85**			**16x130**		**20x85**			**20x130**		**20x200**	
Tension resistance $N_{Rk} = N_{Rk,p} = N_{Rk,b} = N_{Rk,p,c} = N_{Rk,b,c}$ [kN] depending on the mean compressive strength f_b; Installation and use condition w/w, w/d, d/d; (temperature range 50/80°C) [2]																	
Mean compressive strength / Min. compressive strength single brick [1]	Use conditions																
5 / 4 N/mm²	w/w w/d	1,2		2,0		2,5					3,0						
	d/d	2,0		3,5		4,0					5,0						
8 / 6 N/mm²	w/w w/d	1,5		3,0		4,0					5,0						
	d/d	3,0		5,0		6,5					7,5						
10 / 8 N/mm²	w/w w/d	2,0		4,0		5,0					6,5						
	d/d	4,0		7,0		8,5					9,0						

1) The compressive strength of the single brick must not be less than 80% of the mean compressive strength.
2) For temperature range 72/120°C: $N_{Rk\,(72/120°C)} = 0{,}83 \cdot N_{Rk\,(50/80°C)}$.

Table C112.2: Characteristic resistance to pull-out failure or brick breakout failure of a single anchor under tension loading (Push through anchorage)

Anchor rod		**M10**	**M12**	**M16**
Perforated sleeve FIS H K		**18x130/200**		**22x130/200**
Tension resistance $N_{Rk} = N_{Rk,p} = N_{Rk,b} = N_{Rk,p,c} = N_{Rk,b,c}$ [kN] depending on the mean compressive strength f_b; Installation and use condition w/w, w/d, d/d; (temperature range 50/80°C) [2]				
Mean compressive strength / Min. compressive strength single brick [1]	Use conditions			
5 / 4 N/mm²	w/w w/d	2,5		3,0
	d/d	4,0		5,0
8 / 6 N/mm²	w/w w/d	4,0		5,0
	d/d	6,5		7,5
10 / 8 N/mm²	w/w w/d	5,0		6,5
	d/d	8,5		9,0

1) The compressive strength of the single brick must not be less than 80% of the mean compressive strength.
2) For temperature range 72/120°C: $N_{Rk\,(72/120°C)} = 0{,}83 \cdot N_{Rk\,(50/80°C)}$.

Factor for job site tests and displacements see annex C 123.

fischer injection system FIS V Plus for masonry

Performance
Light-weight concrete solid block Vbl, Characteristic resistance under tension loading

Annex C 112

Light-weight concrete solid block Vbl, EN 771-3:2011+A1:2015

Table C113.1: Characteristic resistance to local brick failure or brick edge failure of a single anchor under shear loading (Pre-positioned anchorage)

Anchor rod		**M6**	**M8**	**M6**	**M8**	**-**	**M8**	**M10**	**M8**	**M10**	**-**	**M12**	**M16**	**M12**	**M16**	**M12**	**M16**
Internal threaded anchor FIS E		**-**		**-**		**M6 / M8** 11x85	**-**		**-**		**M10 / M12** 15x85	**-**		**-**		**-**	
Perforated sleeve FIS H K		**12x50**		**12x85**		**16x85**			**16x130**		**20x85**			**20x130**		**20x200**	
Shear resistance $V_{Rk} = V_{Rk,b} = V_{Rk,c,II} = V_{Rk,c,\perp}$ [kN] depending on the mean compressive strength f_b; Installation and use condition w/w, w/d, d/d; (temperature range 50/80°C and 72/120°C)																	
Mean compressive strength / Min. compressive strength single brick [1]	Use conditions																
5 / 4 N/mm²	w/w, w/d, d/d	2,0	3,0	2,0	3,0	2,0	3,5				4,5						
8 / 6 N/mm²	w/w, w/d, d/d	3,0	4,5	3,0	4,5	3,0	5,5				6,5						
10 / 8 N/mm²	w/w, w/d, d/d	4,0	6,0	4,0	6,0	4,0	7,0				8,5						

[1] The compressive strength of the single brick must not be less than 80% of the mean compressive strength.

Table C113.2: Characteristic resistance to local brick failure or brick edge failure of a single anchor under shear loading (Push through anchorage)

Anchor rod		**M10**	**M12**	**M16**
Perforated sleeve FIS H K		**18x130/200**		**22x130/200**
Shear resistance $V_{Rk} = V_{Rk,b} = V_{Rk,c,II} = V_{Rk,c,\perp}$ [kN] depending on the mean compressive strength f_b; Installation and use condition w/w, w/d, d/d; (temperature range 50/80°C and 72/120°C)				
Mean compressive strength / Min. compressive strength single brick [1]	Use conditions			
5 / 4 N/mm²	w/w, w/d, d/d	3,5		4,5
8 / 6 N/mm²	w/w, w/d, d/d	5,5		6,5
10 / 8 N/mm²	w/w, w/d, d/d	7,0		8,5

[1] The compressive strength of the single brick must not be less than 80% of the mean compressive strength.

Factor for job site tests and displacements see annex C 123.

fischer injection system FIS V Plus for masonry

Performance
Light-weight concrete solid block Vbl, Characteristic resistance under shear loading

Annex C 113

Light-weight concrete solid block Vbl, EN 771-3:2011+A1:2015

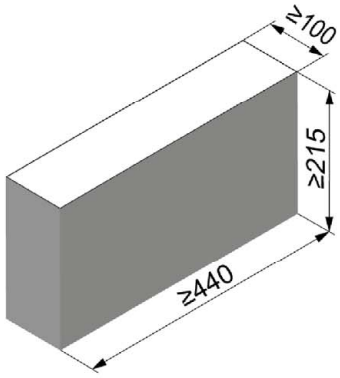

Producer		Roadstone wood		
Nominal dimensions	[mm]	length L	width W	height H
		≥ 440	≥ 100	≥ 215
Mean gross dry density ρ	[kg/dm³]	≥ 2,0		
Mean compressive strength / Min. compressive strength single brick [1)]	[N/mm²]	5 / 4 or 8 / 6 or 10 / 8 or 12,5 / 10		
Standard or annex		EN 771-3:2011+A1:2015		

Table C114.1: Installation parameters

Anchor rod			M6		M8		M10		M12		M16	
Anchor rod without perforated sleeve												
Effective anchorage depth	h_{ef}	[mm]	50	70	50	70	50	70	50	70	50	70
Max. installation torque	max T_{inst}	[Nm]	4		10							
General installation parameters												
Edge distance	$c_{min} = c_{cr}$	[mm]	100									
Spacing	s_{min} ∥	[mm]	75									
	s_{cr} ∥	[mm]	3x h_{ef}									
	s_{min} ⊥	[mm]	75									
	s_{cr} ⊥	[mm]	3x h_{ef}									
Drilling method												
Hammer drilling with hard metal hammer drill												

[1)] The compressive strength of the single brick must not be less than 80% of the mean compressive strength.

Table C114.2: Group factors

Anchor rod			M6	M8	M10	M12	M16
Group factors	$\alpha_{g,N}$ (s_{min} ∥)	[-]	1,6				
	$\alpha_{g,V}$ (s_{min} ∥)	[-]	1,3				
	$\alpha_{g,N}$ (s_{min} ⊥)	[-]	1,4				
	$\alpha_{g,V}$ (s_{min} ⊥)	[-]	1,3				

fischer injection system FIS V Plus for masonry

Performance
Light-weight concrete solid block Vbl, dimensions, installation parameters

Annex C 114

Light-weight concrete solid block Vbl, EN 771-3:2011+A1:2015

Table C115.1: Characteristic resistance to pull-out failure or brick breakout failure of a single anchor under tension loading

Anchor rod		M6	M8	M10	M12	M16
Tension resistance $N_{Rk} = N_{Rk,p} = N_{Rk,b} = N_{Rk,p,c} = N_{Rk,b,c}$ [kN] depending on the mean compressive strength f_b; Installation and use condition w/w, w/d, d/d; (temperature range 50/80°C) [2]						
Mean compressive strength / Min. compressive strength single brick [1]	Use conditions	Effective anchorage depth h_{ef} [mm] ≥ 50				
5 / 4 N/mm²	w/w w/d	1,2	1,2			
	d/d	2,0	2,0			
8 / 6 N/mm²	w/w w/d	1,5	2,0			
	d/d	3,0	3,5			
10 / 8 N/mm²	w/w w/d	2,0	2,5			
	d/d	4,0	4,5			
12,5 / 10 N/mm²	w/w w/d	3,0	3,5			
	d/d	5,0	5,5			

[1] The compressive strength of the single brick must not be less than 80% of the mean compressive strength.
[2] For temperature range 72/120°C: $N_{Rk\,(72/120°C)} = 0{,}83 \cdot N_{Rk\,(50/80°C)}$.

Table C115.2: Characteristic resistance to local brick failure or brick edge failure of a single anchor under shear loading

Anchor rod		M6	M8	M10	M12	M16
Shear resistance $V_{Rk} = V_{Rk,b} = V_{Rk,c,II} = V_{Rk,c,\perp}$ [kN] depending on the mean compressive strength f_b; Installation and use condition w/w, w/d, d/d; (temperature range 50/80°C and 72/120°C)						
Mean compressive strength / Min. compressive strength single brick [1]	Use conditions	Effective anchorage depth h_{ef} [mm] ≥ 50				
5 / 4 N/mm²	w/w w/d d/d	1,2	1,5	1,5	1,5	1,5
8 / 6 N/mm²	w/w w/d d/d	2,0	2,0	2,5	2,5	2,5
10 / 8 N/mm²	w/w w/d d/d	2,5	2,5	3,0	3,0	3,5
12,5 / 10 N/mm²	w/w w/d d/d	3,0	3,5	4,0	4,0	4,5

[1] The compressive strength of the single brick must not be less than 80% of the mean compressive strength.

Factor for job site tests and displacements see annex C 123.

fischer injection system FIS V Plus for masonry

Performance
Light-weight concrete solid block Vbl,
Characteristic resistance under tension and shear loading

Annex C 115

Light-weight concrete solid block Vbl, EN 771-3:2011+A1:2015

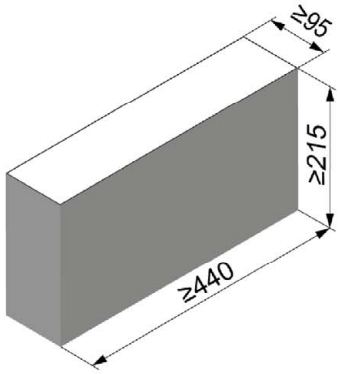

Producer		Tramac		
Nominal dimensions	[mm]	length L	width W	height H
		≥ 440	≥ 95	≥ 215
Mean gross dry density ρ	[kg/dm³]	≥ 2,0		
Mean compressive strength / Min. compressive strength single brick [1)]	[N/mm²]	7,5 / 6 or 10 / 8 or 12,5 / 10 or 15 / 12		
Standard or annex		EN 771-3:2011+A1:2015		

Table C116.1: Installation parameters

Anchor rod			M6		M8		M10		M12		M16	
Anchor rod without perforated sleeve												
Effective anchorage depth	h_{ef}	[mm]	50	70	50	70	50	70	50	70	50	70
Max. installation torque	max T_{inst}	[Nm]	4		10							
General installation parameters												
Edge distance	$c_{min} = c_{cr}$	[mm]	60									
Spacing	s_{min} ∥	[mm]	75									
	s_{cr} ∥	[mm]	3x h_{ef}									
	s_{min} ⊥	[mm]	75									
	s_{cr} ⊥	[mm]	3x h_{ef}									
Drilling method												
Hammer drilling with hard metal hammer drill												

[1)] The compressive strength of the single brick must not be less than 80% of the mean compressive strength.

Table C116.2: Group factors

Anchor rod			M6	M8	M10	M12	M16
Group factors	$\alpha_{g,N}$ (s_{min} ∥)	[-]	1,9				
	$\alpha_{g,V}$ (s_{min} ∥)	[-]	1,4				
	$\alpha_{g,N}$ (s_{min} ⊥)	[-]	1,9				
	$\alpha_{g,V}$ (s_{min} ⊥)	[-]	1,4				

fischer injection system FIS V Plus for masonry

Performance
Light-weight concrete solid block Vbl, dimensions, installation parameters

Annex C 116

Light-weight concrete solid block Vbl, EN 771-3:2011+A1:2015

Table C117.1: Characteristic resistance to pull-out failure or brick breakout failure of a single anchor under tension loading

Anchor rod		M6		M8		M10		M12		M16	
Tension resistance $N_{Rk} = N_{Rk,p} = N_{Rk,b} = N_{Rk,p,c} = N_{Rk,b,c}$ [kN] depending on the mean compressive strength f_b; Installation and use condition w/w, w/d, d/d; (temperature range 50/80°C) [2)]											
Mean compressive strength / Min. compressive strength single brick [1)]	Use con-ditions	Effective anchorage depth h_{ef} [mm]									
		50	70	50	70	50	70	50	70	50	70
7,5 / 6 N/mm²	w/w w/d	1,5	2,0	1,5	2,0	1,5	2,0	1,5	2,0	1,5	2,0
	d/d	2,5	3,5	2,5	3,5	2,5	3,5	2,5	3,5	2,5	3,5
10 / 8 N/mm²	w/w w/d	2,0	2,5	2,0	2,5	2,0	3,0	2,0	3,0	2,0	3,0
	d/d	3,5	4,5	3,5	4,5	3,5	5,0	3,5	5,0	3,5	5,0
12,5 / 10 N/mm²	w/w w/d	2,5	3,5	2,5	3,5	2,5	3,5	2,5	3,5	2,5	3,5
	d/d	4,5	6,0	4,5	6,0	4,5	6,0	4,5	6,0	4,5	6,0
15 / 12 N/mm²	w/w w/d	3,0	4,0	3,0	4,0	3,0	4,5	3,0	4,5	3,0	4,5
	d/d	5,0	7,0	5,0	7,0	5,0	7,5	5,0	7,5	5,0	7,5

1) The compressive strength of the single brick must not be less than 80% of the mean compressive strength.
2) For temperature range 72/120°C: $N_{Rk\,(72/120°C)} = 0{,}83 \cdot N_{Rk\,(50/80°C)}$.

Table C117.2: Characteristic resistance to local brick failure or brick edge failure of a single anchor under shear loading

Anchor rod		M6	M8	M10	M12	M16
Shear resistance $V_{Rk} = V_{Rk,b} = V_{Rk,c,II} = V_{Rk,c,\perp}$ [kN] depending on the mean compressive strength f_b; Installation and use condition w/w, w/d, d/d; (temperature range 50/80°C and 72/120°C)						
Mean compressive strength / Min. compressive strength single brick [1)]	Use con-ditions	Effective anchorage depth h_{ef} [mm] ≥ 50				
7,5 / 6 N/mm²	w/w w/d d/d	2,0	2,0	2,0	1,5	1,5
10 / 8 N/mm²	w/w w/d d/d	2,5	2,5	3,0	2,5	2,5
12,5 / 10 N/mm²	w/w w/d d/d	3,5	3,5	4,0	3,0	3,0
15 / 12 N/mm²	w/w w/d d/d	4,0	4,0	4,5	3,5	3,5

1) The compressive strength of the single brick must not be less than 80% of the mean compressive strength.

Factor for job site tests and displacements see annex C 123.

Autoclaved aerated concrete (cylindrical drill hole), EN 771-4:2011+A1:2015

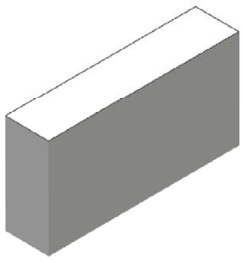

Producer		e.g. Ytong		
Mean gross dry density ρ	[kg/dm³]	0,35	0,5	0,65
Mean compressive strength / Min. compressive strength single brick [1)]	[N/mm²]	2,5 / 2	5 / 4	8 / 6
Standard or annex		EN 771-4:2011+A1:2015		

Table C118.1: Installation parameters

Anchor rod			**M6**		**M8**		**M10**		**M12**		**M16**		**-**		**-**	
Internal threaded anchor FIS E			**-**		**-**		**-**		**-**		**-**		**M6**	**M8**	**M10**	**M12**
													11x85		**15x85**	
Anchor rod and internal threaded anchor FIS E without perforated sleeve																
Effective anchorage depth	h_{ef}	[mm]	100	200	100	200	100	200	100	200	100	200	85			
Max. installation torque	max T_{inst}	[Nm]	1	4	1	8	2	12	2	16	2	20	1		2	
General installation parameters																
Edge distance	$c_{min} = c_{cr}$	[mm]	100													
Spacing	s_{cr} ll = s_{min} ll	[mm]	250													
	h_{ef}=200mm s_{min} ll	[mm]	80													
	h_{ef}=200mm s_{cr} ll	[mm]	3x h_{ef}													
	s_{cr} ⊥ = s_{min} ⊥	[mm]	250													
	h_{ef}=200mm s_{min} ⊥		80													
	h_{ef}=200mm s_{cr} ⊥		3x h_{ef}													
Drilling method																
Hammer drilling with hard metal hammer drill																

1) The compressive strength of the single brick must not be less than 80% of the mean compressive strength.

Table C119.1: Group factors for autoclaved aerated concrete (Compressive strength f_b =2 N/mm²)

Anchor rod			**M6**	**M8**	**M10**	**M12**	**M16**	**-**		**-**	
Internal threaded anchor FIS E			**-**	**-**	**-**	**-**	**-**	**M6**	**M8**	**M10**	**M12**
								11x85		**15x85**	
Group factors	h_{ef}=200 $\alpha_{g,N}$ (s_{min} II)	[-]	1,6					-[1]		-[1]	
	h_{ef}=200 $\alpha_{g,V}$ (s_{min} II)		1,1					-[1]		-[1]	
	$\alpha_{g,N}$ II, $\alpha_{g,V}$ (s_{min} II)		2								
	h_{ef}=200 $\alpha_{g,N}$ (s_{min} ⊥)		1,6					-[1]		-[1]	
	h_{ef}=200 $\alpha_{g,V}$ (s_{min} ⊥)		0,8					-[1]		-[1]	
	$\alpha_{g,N}$ ⊥, $\alpha_{g,V}$ (s_{min} ⊥)		2								

[1] No performance assessed.

Table C119.2: Group factors for autoclaved aerated concrete (Compressive strength f_b =4 N/mm²)

Anchor rod			**M6**	**M8**	**M10**	**M12**	**M16**	**-**		**-**	
Internal threaded anchor FIS E			**-**	**-**	**-**	**-**	**-**	**M6**	**M8**	**M10**	**M12**
								11x85		**15x85**	
Group factors	h_{ef}=200 $\alpha_{g,N}$ (s_{min} II)	[-]	0,7					-[1]		-[1]	
	h_{ef}=200 α_{gV} (s_{min} II)		2,0					-[1]		-[1]	
	$\alpha_{g,N}$ II, α_{gV} (s_{min} II)		2								
	h_{ef}=200 $\alpha_{g,N}$ (s_{min} ⊥)		0,7					-[1]		-[1]	
	h_{ef}=200 $\alpha_{g,V}$ (s_{min} ⊥)		1,2					-[1]		-[1]	
	$\alpha_{g,N}$ ⊥, α_{gV} (s_{min} ⊥)		2								

[1] No performance assessed.

Table C119.3: Group factors for autoclaved aerated concrete (Compressive strength f_b =6 N/mm²)

Anchor rod			**M6**	**M8**	**M10**	**M12**	**M16**	**-**		**-**	
Internal threaded anchor FIS E			**-**	**-**	**-**	**-**	**-**	**M6**	**M8**	**M10**	**M12**
								11x85		**15x85**	
Group factors	h_{ef}=200 $\alpha_{g,N}$ (s_{min} II)	[-]	0,7					-[1]		-[1]	
	h_{ef}=200 $\alpha_{g,V}$ (s_{min} II)		2,0					-[1]		-[1]	
	$\alpha_{g,N}$ II, $\alpha_{g,V}$ (s_{min} II)		2								
	h_{ef}=200 $\alpha_{g,N}$ (s_{min} ⊥)		0,7					-[1]		-[1]	
	h_{ef}=200 $\alpha_{g,V}$ (s_{min} ⊥)		1,2					-[1]		-[1]	
	$\alpha_{g,N}$ ⊥, $\alpha_{g,V}$ (s_{min} ⊥)		2								

[1] No performance assessed.

fischer injection system FIS V Plus for masonry

Performance
Autoclaved aerated concrete (cylindrical drill hole), Group factors

Annex C 119

Autoclaved aerated concrete (cylindrical drill hole), EN 771-4:2011+A1:2015

Table C120.1: Characteristic resistance to pull-out failure or brick breakout failure of a single anchor under tension loading

Anchor rod		**M6**	**M8**	**M10**	**M12**	**M16**	**-**		**-**	
Internal threaded anchor FIS E		**-**	**-**	**-**	**-**	**-**	**M6**	**M8**	**M10**	**M12**
							11x85		**15x85**	
Tension resistance $N_{Rk} = N_{Rk,p} = N_{Rk,b} = N_{Rk,p,c} = N_{Rk,b,c}$ [kN] depending on the mean compressive strength $f_{c,m}$; Installation and use condition w/w, w/d, d/d; (temperature range 50/80°C) [3]										
Mean compressive strength / Min. compressive strength single brick [2]	Use conditions	Effective anchorage depth h_{ef} [mm]											
		100	200	100	200	100	200	100	200	100	200	85	
2,5 / 2 N/mm²	w/w w/d	1,2	1,2	1,5	2,0	1,5	3,0	1,5	3,0	2,0	3,0	1,5	1,5
	d/d	1,5	3,0	1,5	3,0	1,5	3,5	2,0	4,0	2,0	4,0	1,5	1,5
5 / 4 N/mm²	w/w w/d	1,2	-[1]	2,0	1,5	2,5	3,5	2,5	3,5	2,0	3,5	2,0	1,5
	d/d	1,5	-[1]	2,0	3,0	3,0	5,0	2,5	5,0	2,0	5,0	2,0	1,5
8 / 6 N/mm²	w/w w/d	1,5	-[1]	3,0	2,5	4,5	5,0	4,5	7,0	3,0	8,5	3,5	2,5
	d/d	1,5	-[1]	3,5	4,0	5,0	7,0	5,0	9,0	3,0	11,5	3,5	2,5

[1] No performance assessed.
[2] The compressive strength of the single brick must not be less than 80% of the mean compressive strength.
[3] For temperature range 72/120°C: $N_{Rk\,(72/120°C)} = 0{,}83 \cdot N_{Rk\,(50/80°C)}$.

Table C120.2: Characteristic resistance to local brick failure or brick edge failure of a single anchor under shear loading

Anchor rod		**M6**	**M8**	**M10**	**M12**	**M16**	**-**		**-**	
Internal threaded anchor FIS E		**-**	**-**	**-**	**-**	**-**	**M6**	**M8**	**M10**	**M12**
							11x85		**15x85**	
Shear resistance $V_{Rk} = V_{Rk,b} = V_{Rk,c,II} = V_{Rk,c,\perp}$ [kN] depending on the mean compressive strength $f_{c,m}$; Installation and use condition w/w, w/d, d/d; (temperature range 50/80°C and 72/120°C)										
Mean compressive strength / Min. compressive strength single brick [2]	Use conditions	Effective anchorage depth h_{ef} [mm]											
		100	200	100	200	100	200	100	200	100	200	85	
2,5 / 2 N/mm²	w/w w/d d/d	1,2	1,2	1,2	1,2	1,2	1,2	1,5	1,2	1,2	1,2	1,2	1,5
5 / 4 N/mm²	w/w w/d d/d	2,0	-[1]	2,5	2,0	2,0	2,0	2,5	2,0	2,0	2,0	2,0	2,5
8 / 6 N/mm²	w/w w/d d/d	2,5	-[1]	3,0	2,5	3,0	3,0	3,5	4,0	4,5	4,5	2,5	3,5

[1] No performance assessed.
[2] The compressive strength of the single brick must not be less than 80% of the mean compressive strength.

Factor for job site tests and displacements see annex C 123.

fischer injection system FIS V Plus for masonry

Performance
Autoclaved aerated concrete (cylindrical drill hole),
Characteristic resistance under tension and shear loading

Annex C 120

Autoclaved aerated concrete (conical drill hole with special drill bit PBB), EN 771-4:2011+A1:2015

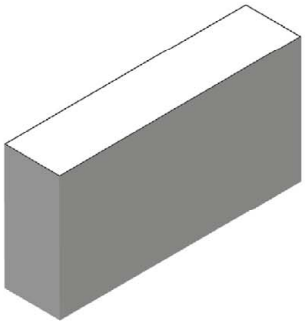

Producer		e.g. Ytong		
Mean gross dry density ρ	[kg/dm³]	0,35	0,5	0,65
Mean compressive strength / Min. compressive strength single brick [1)]	[N/mm²]	2,5 / 2	5 / 4	8 / 6
Standard or annex		EN 771-4:2011+A1:2015		

Table C121.1: Installation parameters

Anchor rod			**M8**		**M10**		**M12**		**-**	
Internal threaded anchor FIS E			-	-	-	-	-	-	**M6**	**M8**
									11x85	
Anchor rod and internal threaded anchor FIS E without perforated sleeve										
Effective anchorage depth	h_{ef}	[mm]	75	95	75	95	75	95	85	
Max. installation torque	max T_{inst}	[Nm]	2							
General installation parameters										
Edge distance	$c_{min} = c_{cr}$	[mm]	120	150	120	150	120	150	150	
Spacing	s_{cr} II = s_{min} II	[mm]	240	300	240	300	240	300	300	
	s_{cr} ⊥ = s_{min} ⊥	[mm]	240	250	240	250	240	250	250	
Drilling method										
Hammer drilling with hard metal hammer drill										

[1)] The compressive strength of the single brick must not be less than 80% of the mean compressive strength.

Table C121.2: Group factors

Anchor rod			**M8**		**M10**		**M12**		**-**	
Internal threaded anchor FIS E			-	-	-	-	-	-	**M6**	**M8**
									11x85	
Group factors	$\alpha_{g,N}$ (s_{min} II)	[-]	2							
	$\alpha_{g,V}$ (s_{min} II)									
	$\alpha_{g,N}$ (s_{min} ⊥)									
	$\alpha_{g,V}$ (s_{min} ⊥)									

fischer injection system FIS V Plus for masonry

Performance
Autoclaved aerated concrete (conical drill hole with special drill bit PBB), dimensions, installation parameters

Annex C 121

Autoclaved aerated concrete (conical drill hole with special drill bit PBB), EN 771-4:2011+A1:2015

Table C122.1: Characteristic resistance to pull-out failure or brick breakout failure of a single anchor under tension loading

Anchor rod	**M8**		**M10**		**M12**		**-**	
Internal threaded anchor FIS E	-	-	-	-	-	-	**M6**	**M8**
							11x85	

Tension resistance $N_{Rk} = N_{Rk,p} = N_{Rk,b} = N_{Rk,p,c} = N_{Rk,b,c}$ [kN] depending on the mean compressive strength $f_{c,m}$; Installation and use condition w/w, w/d, d/d; (temperature range 50/80°C)[2)]

Mean compressive strength / Min. compressive strength single brick [1)]	Use con-ditions	Effective anchorage depth h_{ef} [mm]						
		75	95	75	95	75	95	85
2,5 / 2 N/mm²	w/w w/d	2,0	2,5	2,0	2,5	2,0	2,5	2,0
	d/d	2,0	2,5	2,0	2,5	2,0	2,5	2,0
5 / 4 N/mm²	w/w w/d	3,0	3,5	3,0	3,5	3,0	3,5	3,0
	d/d	3,0	3,5	3,0	3,5	3,0	3,5	3,0
8 / 6 N/mm²	w/w w/d	3,5	4,0	3,5	4,0	3,5	4,0	3,5
	d/d	4,0	4,5	4,0	4,5	4,0	4,5	4,0

1) The compressive strength of the single brick must not be less than 80% of the mean compressive strength.
2) For temperature range 72/120°C: $N_{Rk\,(72/120°C)} = 0{,}83 \cdot N_{Rk\,(50/80°C)}$.

Table C122.2: Characteristic resistance under shear loading

Anchor rod	**M8**		**M10**		**M12**		**-**	
Internal threaded anchor FIS E	-	-	-	-	-	-	**M6**	**M8**
							11x85	

Shear resistance $V_{Rk} = V_{Rk,b} = V_{Rk,c,II} = V_{Rk,c,\perp}$ [kN] depending on the mean compressive strength $f_{c,m}$; Installation and use condition w/w, w/d, d/d; (temperature range 50/80°C and 72/120°C)

Mean compressive strength / Min. compressive strength single brick [1)]	Use con-ditions	Effective anchorage depth h_{ef} [mm]						
		75	95	75	95	75	95	85
2,5 / 2 N/mm²	w/w w/d	2,5						
	d/d							
5 / 4 N/mm²	w/w w/d	4,5						
	d/d							
8 / 6 N/mm²	w/w w/d	6,0						
	d/d							

1) The compressive strength of the single brick must not be less than 80% of the mean compressive strength.

Factor for job site tests and displacements see annex C 123.

fischer injection system FIS V Plus for masonry

Performance
Autoclaved aerated concrete (conical drill hole with special drill bit PBB),
Characteristic resistance under tension and shear loading

Annex C 122

β-factors for job site tests; displacements

Table C123.1: β-factors for job site tests

use conditions		w/w and w/d		d/d	
temperature range [°C]		50/80	72/120	50/80	72/120
Material	Size				
solid units	M6	0,55	0,46	0,96	0,80
	M8	0,57	0,51		
	M10	0,59	0,52		
	M12 FIS E 11x85	0,60	0,54		
	M16 FIS E 15x85	0,62	0,52		
	FIS H 16x85 K	0,55	0,46		
hollow units	all sizes	0,86	0,72	0,96	0,80
Autoclaved aerated concrete cylindrical drill hole	all sizes	0,73	0,73	0,81	0,81
Autoclaved aerated concrete conical drill hole	all sizes	0,66	0,59	0,73	0,66

Table C123.2: Displacements

Material	N [kN]	δN_0 [mm]	δN_∞ [mm]	V [kN]	δV_0 [mm]	δV_∞ [mm]
solid units and autoclaved aerated concrete h_{ef}=100mm	$\frac{N_{Rk}}{1,4 * \gamma_{Mm}}$	0,03	0,06	$\frac{V_{Rk}}{1,4 * \gamma_{Mm}}$	0,82	0,88
hollow units	$\frac{N_{Rk}}{1,4 * \gamma_{Mm}}$	0,48	0,06	$\frac{V_{Rk}}{1,4 * \gamma_{Mm}}$	1,71	2,56
solid brick Mz NF annex C 4 - C 7	$\frac{N_{Rk}}{1,4 * \gamma_{Mm}}$	0,74	1,48	$\frac{V_{Rk}}{1,4 * \gamma_{Mm}}$	1,23	1,85
solid brick KS NF annex C 14 / C 15	$\frac{N_{Rk}}{1,4 * \gamma_{Mm}}$	0,20	0,40	$\frac{V_{Rk}}{1,4 * \gamma_{Mm}}$	0,91	1,37
AAC h_{ef}=200 mm annex C 118 - C 120	$\frac{N_{Rk}}{1,4 * \gamma_{Mm}}$	1,03	2,06	$\frac{V_{Rk}}{1,4 * \gamma_{Mm}}$	1,25	1,88
brick Annex C 101 / C 102	$\frac{N_{Rk}}{1,4 * \gamma_{Mm}}$	0,03	0,06	$\frac{V_{Rk}}{1,4 * \gamma_{Mm}}$	6,44	9,66

For anchorage in autoclaved aerated concrete, the partial factor γ_{MAAC} shall be used instead of γ_{Mm}.

Fire resistance under tension and shear loading

Table C124.1: Fire resistance under tension and shear loading

Brick			Solid brick Mz,NF, acc. to Annex C 4			Solid calcium silicate brick KS, NF,acc. to Annex C 14			Perforated calcium silicate brick KSL, acc to Annex C 24			Vertical perforated brick HLz, acc to Annex C 30			Vertical perforated brick HLz, acc to Annex C 28		
Mean compressive strength / Min. compressive strength single brick [3]			≥ 15 / ≥ 12			≥ 15 / ≥ 12			≥ 10 / ≥ 8			≥ 7,5 / ≥ 6			≥ 5 / ≥ 4		
Size			M8	M10	M12	M8	M10	M12	M8	M10	M12	M8	M10	M12	M8	M10	M12
Perforated Sleeve			-			-			16x130		20x130	16x85		20x 85	16x130		20x130
Perforated Sleeve for bridging of unbearing layer			-			-			-		20x 200	16x130		20x 130	-		20x200
h_{ef}		[mm]	≥ 80			≥ 50			≥ 130		≥ 130	≥ 85		≥ 85	≥ 130		≥ 130
Characteristic resistance to failure under tension loading																	
$N_{Rk,s,fi} = N_{Rk,p,fi} = N_{Rk,b,fi}$ [2]	R30	[kN]	0,82			0,32			1,07	1,09	1,10	0,28	0,30	0,35	0,31		
	R60		0,73			0,31			0,66	0,61	0,56	0,19	0,22	0,22	0,22		
	R90		0,64			0,29			0,25	0,13	- [1]	0,10	0,10	0,10	0,13		
	R120		0,59			0,28			- [1]	- [1]	- [1]	- [1]	- [1]	- [1]	- [1]		
Characteristic resistance to failure under shear loading [2]																	
without lever arm																	
$V_{Rk,s,fi}$	R30	[kN]	0,82			0,32			1,07	1,09	1,10	0,28	0,30	0,35	0,31		
	R60		0,73			0,31			0,66	0,61	0,56	0,19	0,22	0,22	0,22		
	R90		0,64			0,29			0,25	0,13	- [1]	0,10	0,10	0,10	0,13		
	R120		0,59			0,28			- [1]	- [1]	- [1]	- [1]	- [1]	- [1]	- [1]		
with lever arm																	
$M^0_{Rk,s,fi}$	R30	[Nm]	0,83	1,05	1,27	0,33	0,42	0,50	1,09	1,40	1,71	0,29	0,39	0,54	0,32	0,40	0,48
	R60		0,74	0,93	1,13	0,31	0,39	0,47	0,67	0,78	0,86	0,19	0,28	0,34	0,22	0,28	0,34
	R90		0,65	0,82	0,99	0,29	0,37	0,44	0,26	0,17	- [1]	0,10	0,12	0,15	0,13	0,16	0,20
	R120		0,60	0,76	0,92	0,28	0,35	0,43	- [1]	- [1]	- [1]	- [1]	- [1]	- [1]	- [1]	- [1]	- [1]
General installation Parameters																	
Edge distance and spacing	$c_{cr,fi}$	[mm]	100			60			80			80			100		
	$s_{cr,fi}$		320			200			520			340			520		

[1] No performance assessed.
[2] $V_{Rk,b,fi} = N_{Rk,b,fi}$.
[3] The compressive strength of the single brick must not be less than 80% of the mean compressive strength.

In absence of national regulations, the recommended partial factor $\gamma_{M,fi} = 1,0$.

fischer injection system FIS V Plus for masonry

Performance
Fire resistance to failure under tension and shear loading; Fire resistance to pull-out failure or brick breakout failure of a single anchor under tension loading

Annex C 124