Technical data sheet

Flat angle cover, for device installation trunking Rapid 80 type 70110
Item number: 6274220



Flat angle cover fitting made of halogen-free PC/ABS for simple creation of a rising or falling 90° change of direction with device installation trunking of the series Rapid 80 GK, GKH, GS and GA. The flat angle cover fitting can be used for symmetrical and asymmetrical trunking types.

PC/ABS Polycarbonate/Acrylnitrile-butadiene-styrene

Master data

Item number	6274220
Type	GK-FH70110RW
Description 1	Flat angle
Description 2	hood fitting
Manufacturer	OBO
Dimension	70x110mm
Colour	Pure white; RAL 9010
Material	Polycarbonate/Acrylnitrile-butadiene-styrene
Smallest sales unit	1
Unit of quantity	Piece
Weight	15.1 kg
Weight unit	kg/100 pc.
CO2 Footprint (GWP) Cradle-to-Gate	1,1818 kg CO2e / 1 Piece

Technical data sheet

Flat angle cover, for device installation trunking Rapid 80 type 70110
Item number: 6274220

Dimensions

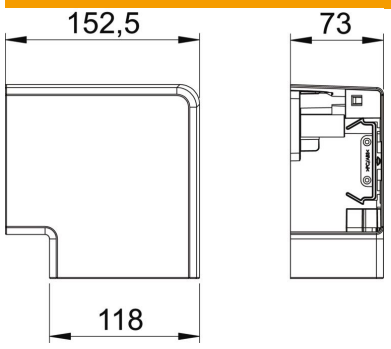

Length	152.5 mm
Width	118 mm
Height	73 mm

Technical data

Number of covers	1
Version for	Hood fitting
for duct width	110 mm
for trunking height	70 mm
Halogen-free	yes
Cable retaining clip	no
Duct connector	no
Cover mounting type	Cross-over
Mounting perforation in base	no
Cover width	0 mm
Cover width 2	0 mm
Cover width 3	0 mm
Change of direction	Vertical, rising/falling
ROHS-conformant	yes
Protection rating	IP30
Protective film	yes
Protection rating IK code	IK08
Symmetrical	yes
Permitted temperature range, max.	60 °C
Permitted temperature range, min.	-15 °C
Angle range, max.	90 mm
Angle range, min.	90 mm