Technical data sheet

Connection thread sealing ring, PG

Item number: 2030098

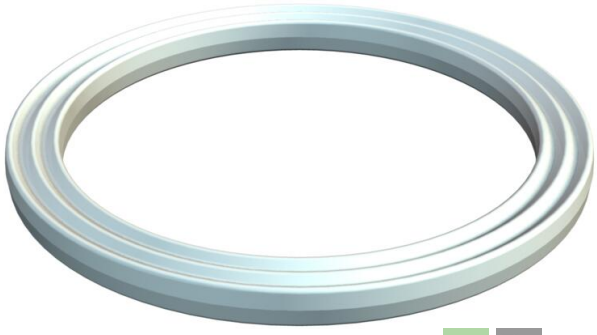

Connection thread sealing ring, in accordance with Part 9 to DIN 46320, however, dimensions may, according to material or function, deviate, suitable for all plastic cable glands with PG connection thread to DIN EN 40430, the internal diameter of the sealing rings are designed so that they can be captively pre-mounted.

HALOGEN FREE Pg

PE Polyethylene

Master data

Item number	2030098
Type	107 F PG9 PE
Description 1	Connection thread sealing ring
Manufacturer	OBO
Dimension	PG9
Material	Polyethylene
Smallest sales unit	100
Unit of quantity	Piece
Weight	0.013 kg
Weight unit	kg/100 pc.
CO2 Footprint (GWP) Cradle-to-Gate	0,0018 kg CO2e / 1 Piece

Dimensions

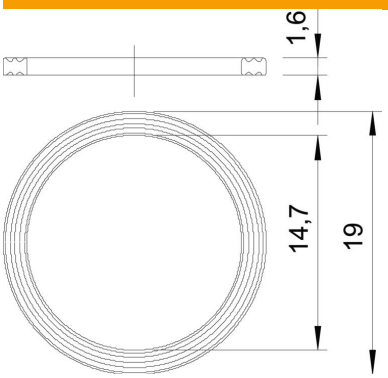

Dimension D1	19 mm
Dimension D2	14.7 mm
Dimension t	1.6 mm

Technical data sheet

Connection thread sealing ring, PG

Item number: 2030098

Technical data

Version for	Flat sealing ring
Screw for PG thread dimension	9
Halogen-free	yes
Inner diameter	14.7 mm
ROHS-conformant	yes