# SPARE PARTS

Seat & Cover
SW; SC

T572401

ILIFE O

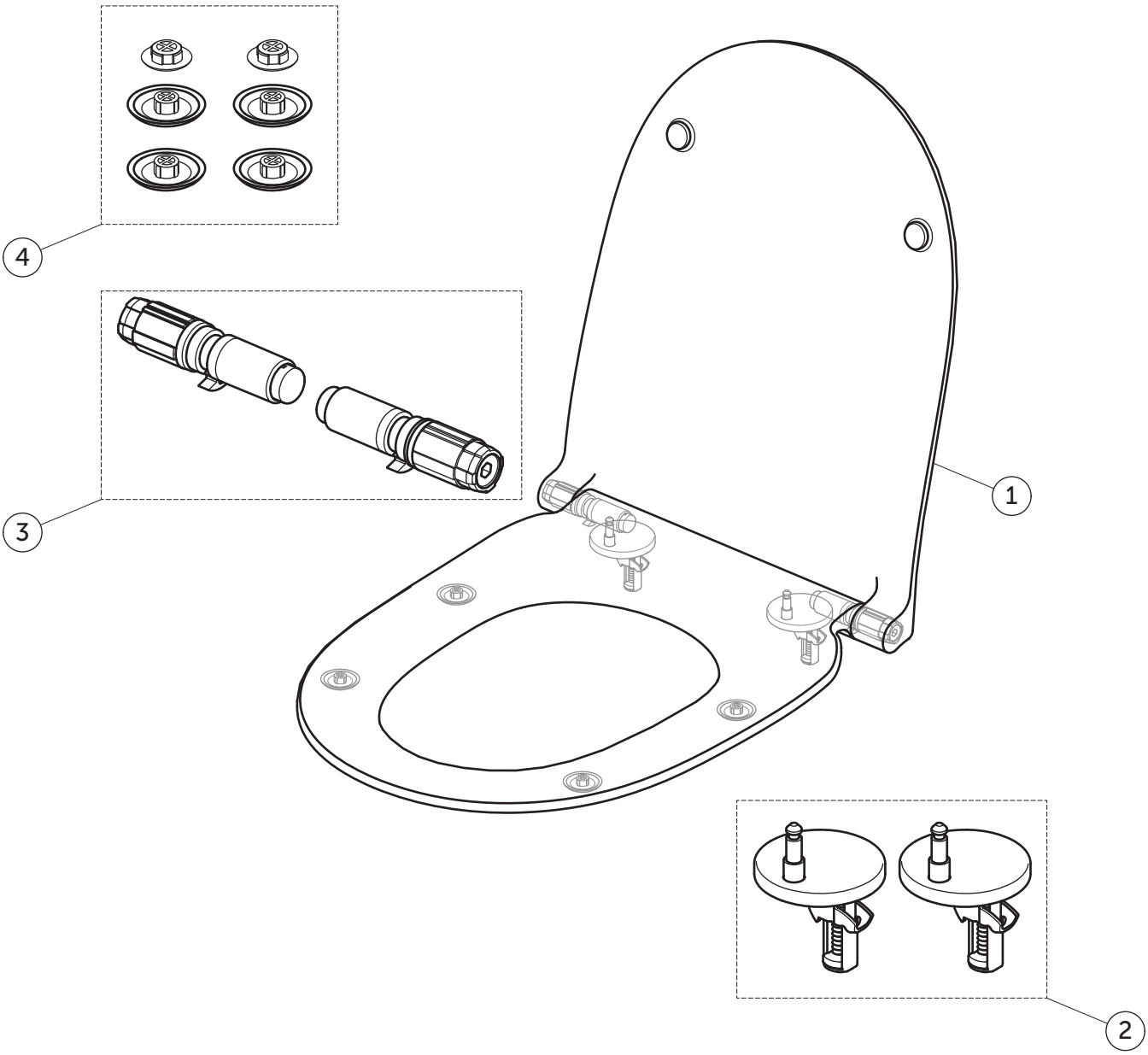


| Item | Description | Spare Code |
|---|---|---|
| 1 | IS I.LIFE O SEAT&CVR SW SCL WHITE | |
| 2 | TOILET SEAT HINGE PACK INTEGRATED TOPFIX | WV04367 |
| 3 | TOILET SEAT DAMPER 18 MM BS ZP34 SW | WV04567 |
| 4 | TOILET SEAT BUFFERS 6 PCS BS0713+S0712 | EW02467 |


Ideal Standard International NV
Corporate Village – Gent Building
Da Vincilaan 2
B1935 – Zaventem
Belgium

BE +32 (02) 325 66 33
BG +359 675 30362
DE +49 (0)228 521 580
EG +202 26969700
FR +33 (0)1 49 38 28 00
GB 01482 496 318
GR +30 210 67 90 810
HR +38591 22 99 304
HU +36 30 6991 594
IT 800 652 290
ME +971 4 804 2400
NL +31 (077) 355 08 08
PL +48 71 7868 301/302
RO +40 21 3223 201/202
SI 00386 59 919040
TR +90 216 314 87 87
UA +359 675 30 468
AL/XK/BA +359 887 709 696
CZ/SK +420 417 592 179
DK/NO/SE +45 75 84 10 10
ES/PT +34 93 561 80 00
LV/LT/EE +371 673 57 792
RS/MK/ME +381 11 713 80 58
RU/MD +7 495 669 23 11


Ideal Standard