Technical data sheet

Anchor rail AML3518, slot 16.5 mm, FT, perforated

Item number: 1119684



Central C profile rail for cable routing, in conjunction with clamp clips with a hammerhead foot. Can also be used as suspension construction for cable support systems.

CE 16,5 H E30 E90

St Steel

FT Hot-dip galvanised

Master data

Item number	1119684
Type	AML3518P0600FT
Description 1	Profile rail
Description 2	perforated, slot 16.5mm
Manufacturer	OBO
Dimension	600x35x18
Material	Steel
Surface	Hot-dip galvanised
Surface standard	DIN EN ISO 1461
Smallest sales unit	10
Unit of quantity	Piece
Weight	53.4 kg
Weight unit	kg/100 pc.
CO2 Footprint (GWP) Cradle-to-Gate	1,1656 kg CO2e / 1 Piece

Technical data sheet

Anchor rail AML3518, slot 16.5 mm, FT, perforated

Item number: 1119684

Dimensions

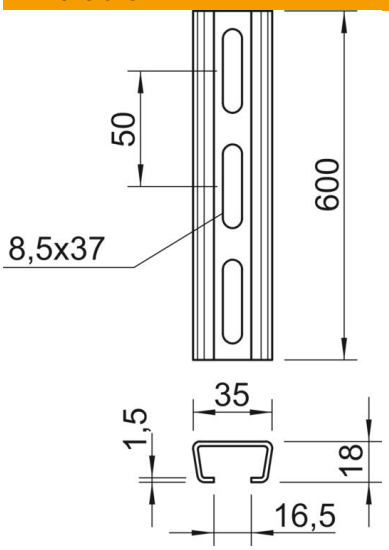

Length	600 mm
Width	35 mm
Height	18 mm
Dimension L	600 mm

Technical data

Breakable	no
Type of perforation	Perforated back
Version for	Single profile
Drill hole spacing, centre	50 mm
Bundle	10 m
Maintain electrical functions	yes
Material thickness	1.5 mm
With perforation	yes
With toothing	no
Profile shape	C profile
ROHS-conformant	yes
Slot width	16.5 mm
Static value A	1.01 cm²
Static value Iy	0.44 cm⁴
Static value Iz	1.84 cm⁴
Static value Wy	0.42 cm³
Static value Wz	1.05 cm³