mm [inches]

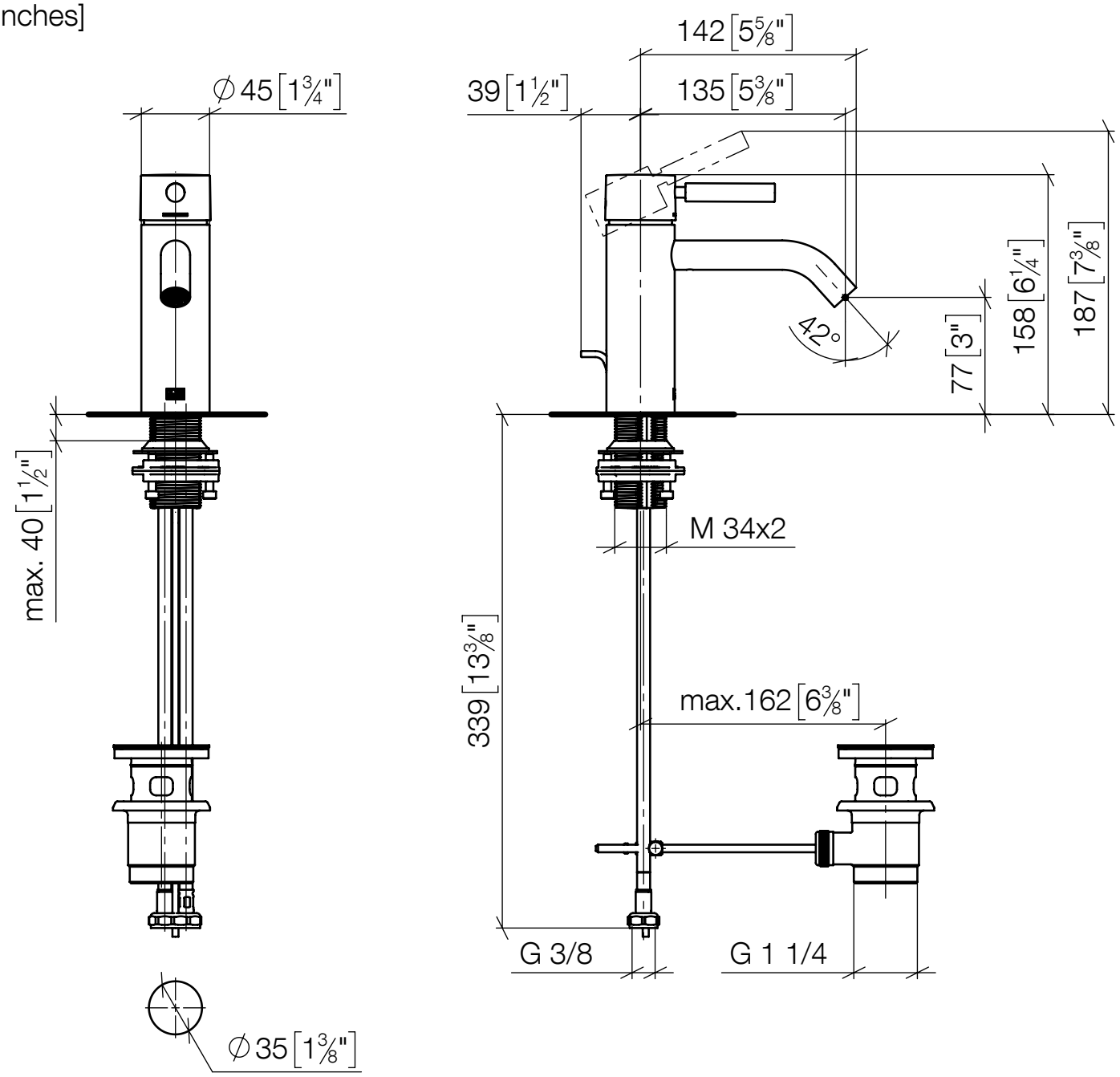

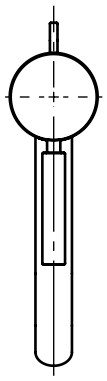

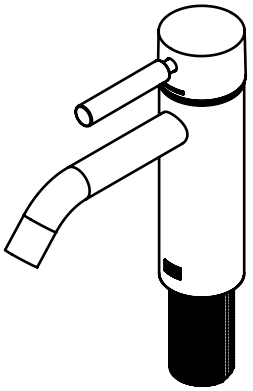

1:4

100 mm

10 inch