Walraven RapidStrut® Inter Flange Clamp

(H3650)

to connect Strut rails inside of steel beam flanges

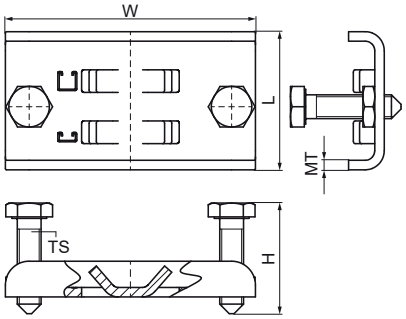

Features & benefits

- set of two clamping plates, to be installed in combination with Walraven RapidStrut® Rail
- for connecting installation between the flanges of I- or U-profile steelwork without drilling or welding
- material: clamp made of steel 1.0242 (S250GD); hexagon head bolts M10x40 with tip: steel class 8.8 (EN-ISO 898-1); hexagon thin nuts M10 DIN 439-B: steel class 04 (EM-ISO 898-2)
- clamp: ZM310-MAC (pre-galvanized); fasteners: zinc plated ISO 2081-Fe/Zn5/A (EN ISO 2081:2008)

Product Number	VVS Number	For Rail Type	Total Height	Total Width	Total Length	Thread Size	Material Thickness	Maximum Allowed Load Faz
Reference letter			*H*	*W*	*L*	*TS*	*MT*	*Fa,z*
Unit description			*mm*	*mm*	*mm*		*mm*	*N*
6078031	018041970	41x21, 41x41	40	105	58	M10	4.00	2,100