Data Sheet | Item Number: 857-150

Basic relay; Nominal input voltage: 12 VDC; 1 changeover contact; Limiting continuous current: 6 A; Module width: 5 mm; Module height: 15 mm

https://www.wago.com/857-150

Similar to illustration

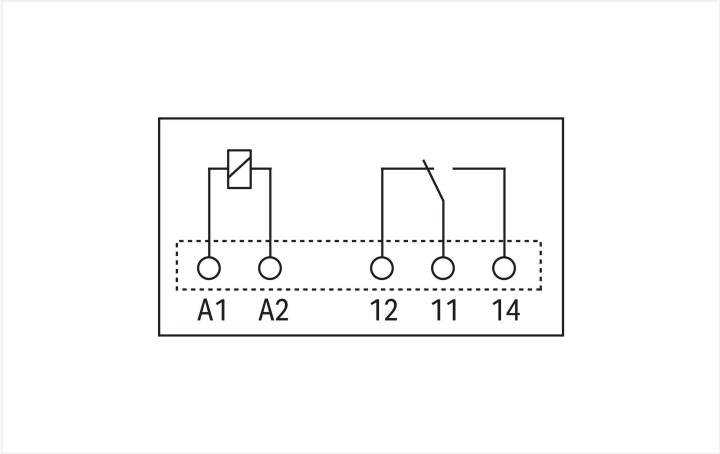

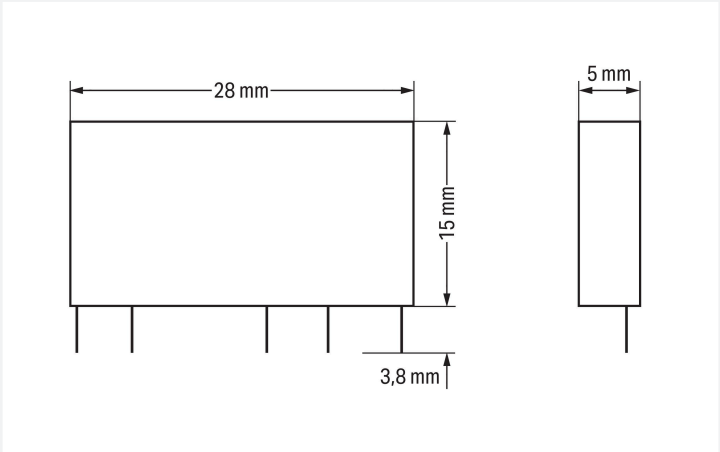

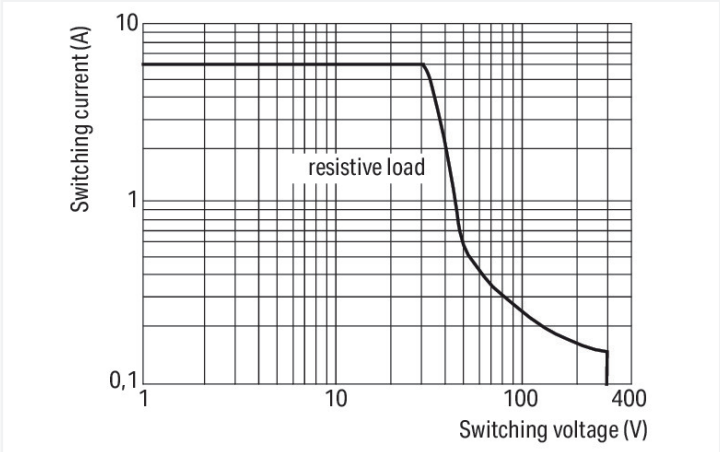

DC load limit curve

Notes

Note	To protect the relay coils and contacts, inductive loads must be dampened with an effective protection circuit.

Technical data

Control circuit

Nominal input voltage U_N	12 VDC

Load circuit

Number of changeover/switchover contacts	1
Contact material (relay)	$AgSnO_2$
Limiting continuous current	6 A
Inrush current (resistive) max.	(AC) 20 A / 0.02 s
Switching Voltage, Max.	250 VAC
Switching power (resistive) max.	AC 1500 VA; DC (see load limit curve)
Switching capacity	AC-15: 3 A / 250 VAC; DC-13: 2 A / 24 VDC
Recommended minimum load	10 V / 10 mA; 24 V / 1 mA
Pull-in time (typ.)	8 ms
Drop-out time (typ.)	4 ms
Bounce time (typ.)	3.5 ms
Electrical life (NO; resistive load; 23 °C)	50 x 10^3 switching operations
Mechanical life	5 x 10^6 switching operations

Load circuit

Switching frequency with/without load (max.)	6 min^{-1} / 180 min^{-1}

Safety and protection

Dielectric strength (control/load circuit) (AC, 1 min)	4 kVrms
Dielectric strength (open contact) (AC, 1 min)	1 kVrms
Protection type	IP20

Physical data

Width	5 mm / 0.197 inches
Height from the surface	15 mm / 0.591 inches
Depth	28 mm / 1.09 inches

Mechanical data

Mounting type	Pluggable module

Material data

Note (material data)	Information on material specifications can be found here
Insulation material (main housing)	Polyamide (PA66)
Flammability class per UL94	V0
Fire load	0 MJ
Weight	4.7 g

Environmental requirements

Ambient temperature (operation at U_N)	-40 … +85 °C
Ambient temperature (storage)	-40 … +85 °C
Relative humidity	5 … 85 % (no condensation permissible)
Operating altitude (max.)	2000 m

Standards and specifications

Standards/specifications	EN 61810-1 EN 61373 VDE UR

Commercial data

Product Group	6 (INTERFACE ELECTRONIC)
PU (SPU)	20 pcs
Packaging type	Box
Country of origin	CZ
GTIN	4050821868293
Customs tariff number	85364900990

 Continued on next page

Product Classification

UNSPSC	39122334
eCl@ss 10.0	27-37-16-01
eCl@ss 9.0	27-37-16-01
ETIM 9.0	EC001437
ETIM 8.0	EC001437
ECCN	NO US CLASSIFICATION

Environmental Product Compliance

RoHS Compliance Status	Compliant,No Exemption

Approvals / Certificates

General approvals

Approval	Standard	Certificate Name
UL Underwriters Laboratories Inc.	UL 508	E340707

Downloads

Environmental Product Compliance

Compliance Search

Environmental Product Compliance 857-150

Documentation

Bid Text

857-150	19.02.2019	xml 4.24 KB	
857-150	29.11.2018	doc 26.50 KB	

CAD/CAE-Data

CAD data

2D/3D Models 857-150

CAE data

EPLAN Data Portal 857-150

WSCAD Universe 857-150

ZUKEN Portal 857-150

 Continued on next page

1 Compatible Products

1.1 Optional Accessories

1.1.1 Socket

1.1.1.1 Socket without relay

Item No.: 857-104
Relay socket; Nominal input voltage: 24 V AC/DC; for 5 mm basic relays; Yellow status indicator

Installation Notes

Installation

Removing a relay via ejector.