Walraven RapidStrut® 'Heavy Duty' Beam Clamp

(H3640)

to connect Strut rails to steel beams

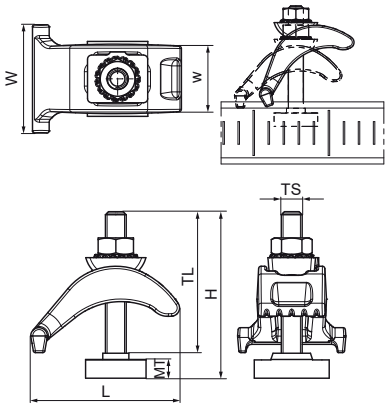

Features & benefits

- solid cast iron beam clamp for suspension of heavy loads onto beams without welding or drilling
- up to flange thickness 35 mm
- for fixing of all Walraven RapidStrut® to a steel beam
- material: steel
- hot dip galvanized

Product Number	For Rail Type	Total Height	Total Width	Total Length	Thread Size	Thread Length	Width	Material Thickness	Maximum Allowed Load Faz	Maximum Allowed Load Fax	Torque Moment For Installation
Reference letter		*H*	*W*	*L*	*TS*	*TL*	*w*	*MT*	*Fa,z*	*Fa,x*	*T inst.*
Unit description		*mm*	*mm*	*mm*		*mm*	*mm*	*mm*	*N*	*N*	*Nm*
6072002	41x21, 41x41, 41x51, 41x62, 41x82	80	52	72	M10	63	35	9.00	7,800	1,500	30