# Walraven RapidStrut® 41x21D 'Heavy Duty' Set

*(H3625)*

complete set for steel beam fixing

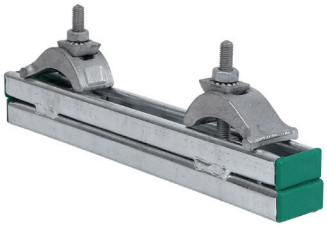

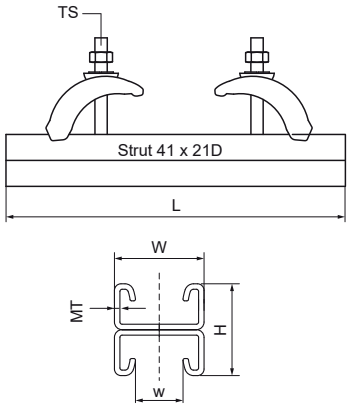


## Features & benefits

- solid cast iron beam clamp for suspension of heavy loads onto beams without welding or drilling
- up to flange thickness 35 mm
- material: beam clamp made of steel; rail made of steel 1.0332
- hot dip galvanized
- consists of: 1 length of Walraven RapidStrut® Rail 41x21D, 2 Beam clamps (Part No. 607 2 002), 4 Rail End Caps
- beam clamp also available loose

| Product Number | For Rail Type | Total Height | Total Width | Total Length | Thread Size | Thread Length | Width | Material Thickness | Maximum Allowed Load Faz | Maximum Allowed Load Fax | Torque Moment For Installation |
|---|---|---|---|---|---|---|---|---|---|---|---|
| *Reference letter* | | *H* | *W* | *L* | *TS* | *TL* | *w* | *MT* | *Fa,z* | *Fa,x* | *T inst.* |
| *Unit description* | | *mm* | *mm* | *mm* | | *mm* | *mm* | *mm* | *N* | *N* | *Nm* |
| 6073400 | 41x21 | 110 | 52 | 400 | M10 | 63 | 41 | 9.00 | 5,000 | 1,500 | 30 |
| 6073600 | 41x21 | 110 | 52 | 600 | M10 | 63 | 41 | 9.00 | 5,000 | 1,500 | 30 |