Spare Parts / Ersatzteile / Pièces de recharge / Pezzi di Ricambio / Piezas de requesto / Parte de reposição / Reserveonderdelen / Reservdelar / Reservedeler / Varaosat / Vraosat / Varahlutir / Ανταλλακτικά / Yedek Parçalar / Náhradní díly / Náhradné diely / Nadomestni deli / Резервни части / Запчасти / Części Zapasowe / Piese de schimb / Rendelhető alkatrészek / Запасні частини / Reservni delovi / Резервни делови / Резервни делови / Atsarginių dalių / Tellitavad varuosad / Rezervju daļu

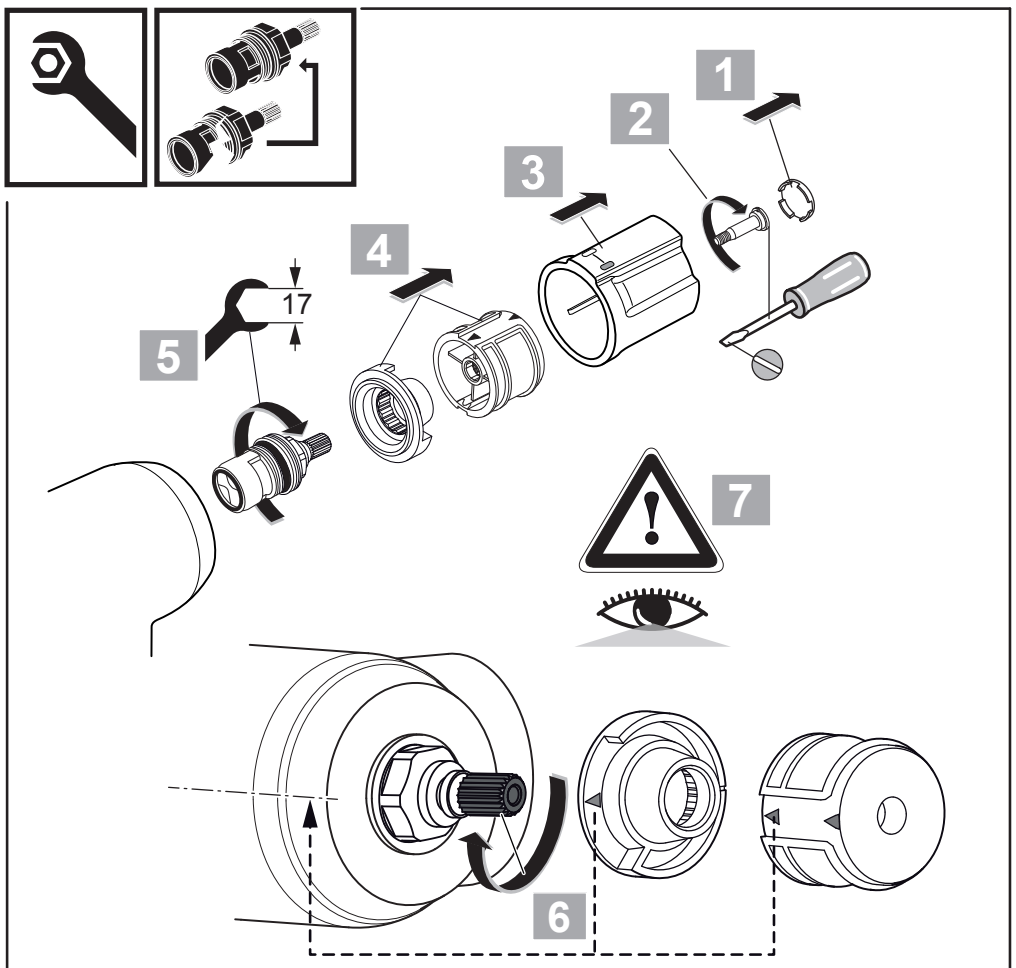

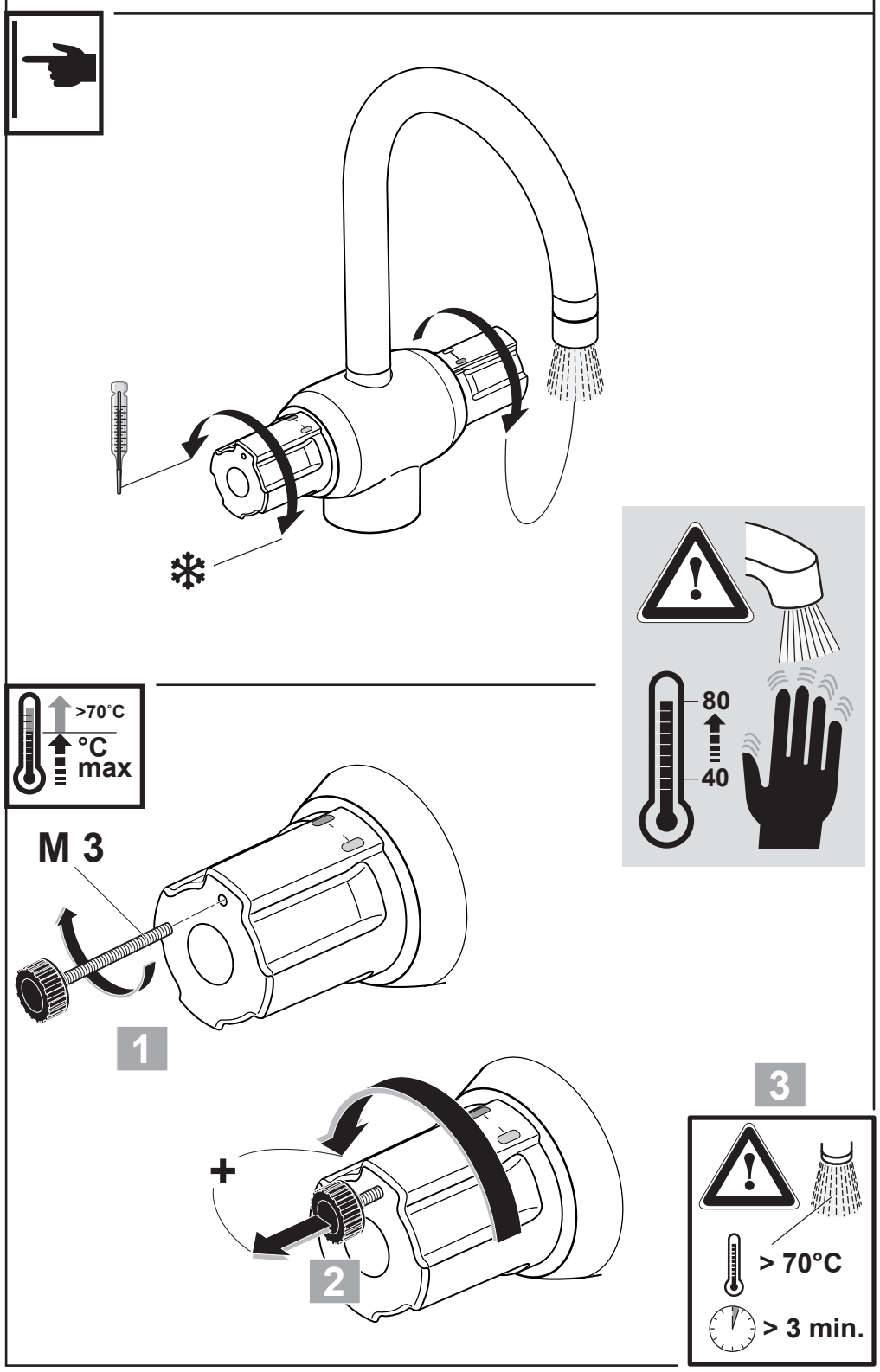

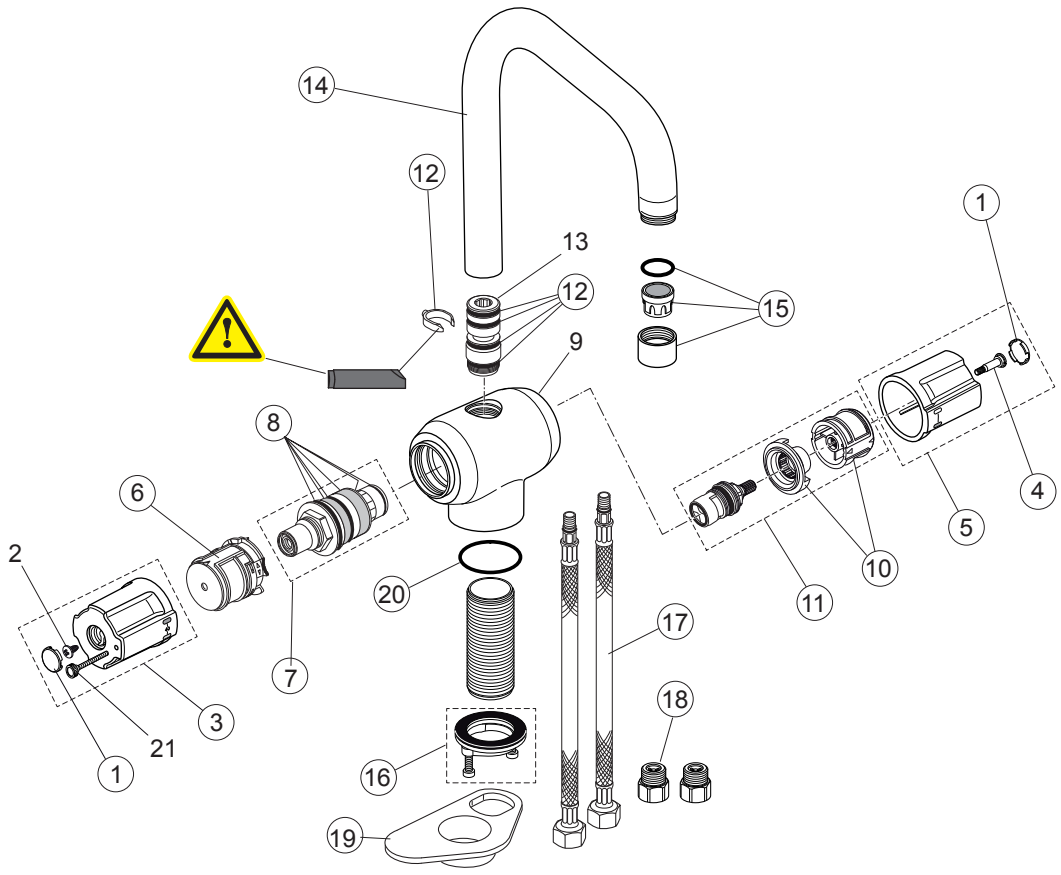

Pos.	Part No.
1	E 960 641 AA
3	A 963 213 AA
4	A 962 998 NU
5	A 963 214 AA
6	A 961 889 NU
7	F 961 044 NU
8	A 962 230 NU
10	A 963 432 NU
11	A 861 243 NU

12	F 960 031 NU
14	A 961 789 AA
15	A 961 883 AA
16	A 960 263 NU
17	A 963 600 NU
18	A 961 909 AA
19	A 962 328 NU
20	A 860 070 NU

Ideal Standard

CERAPLUS SAFE

A 5545 ..

1221 / A 866 302R1
Made in Germany

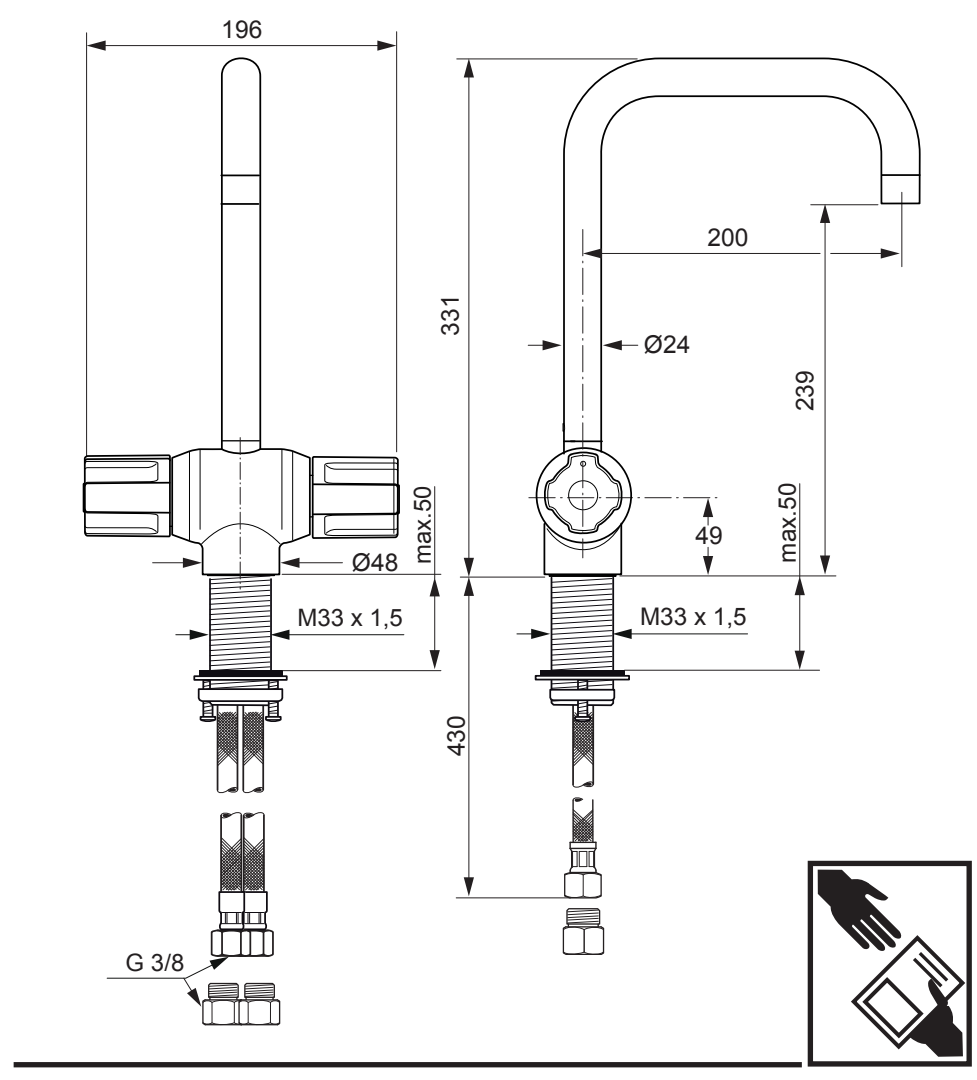

Ideal Standard International NV
Corporate Village - Gent Building
Da Vincilaan 2
1935 Zaventem
Belgium

www.idealstandardinternational.com

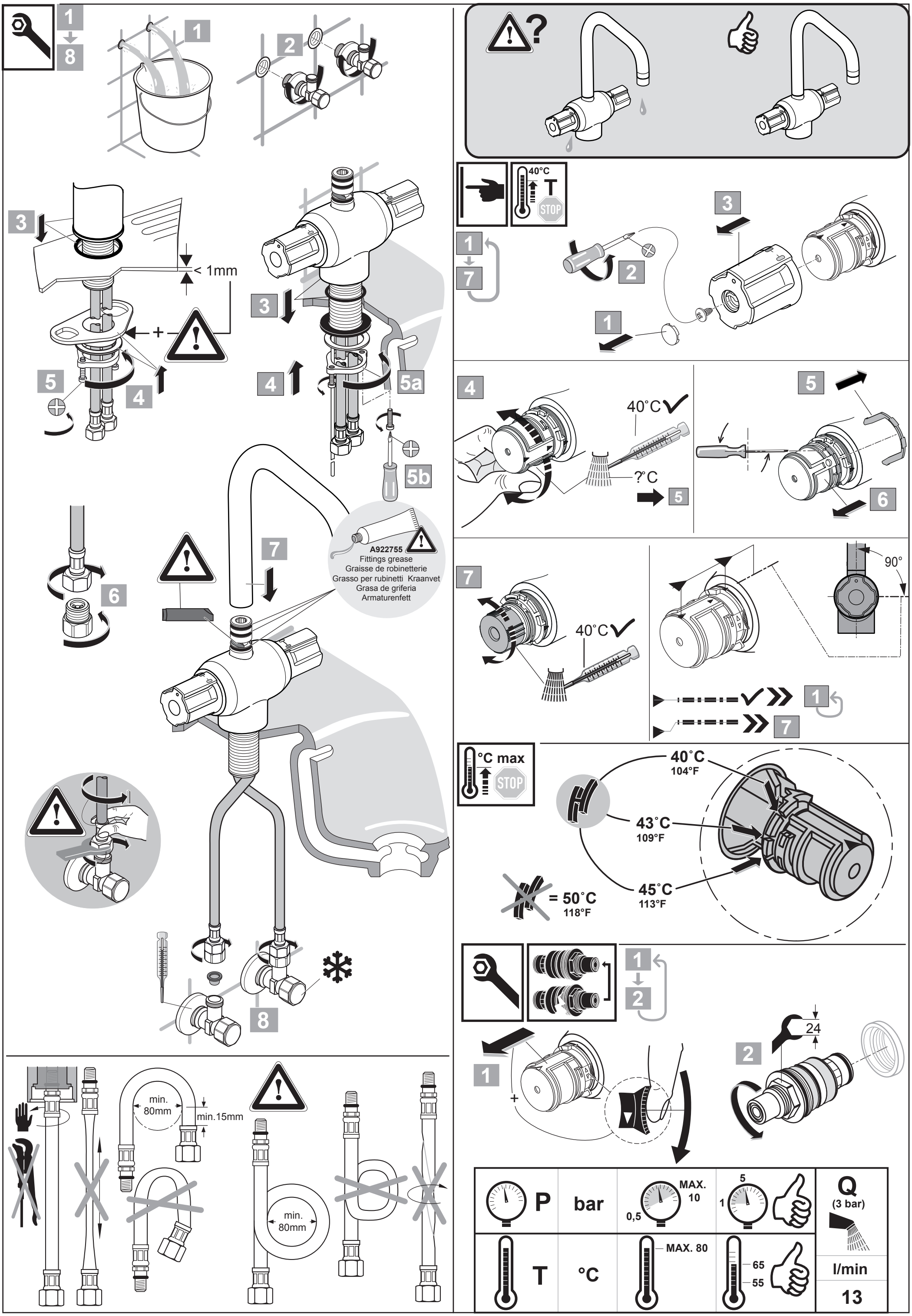
1
8
1
2
3
< 1mm
+
5
4
3
4
5a
5b
6
7
A922755
Fittings grease
Graisse de robinetterie
Grasso per rubinetti Kraanvet
Grasa de griferia
Armaturenfett
8
40°C
T
STOP
1
7
3
2
1
4
40°C
?°C
5
5
6
7
40°C
90°
1
7
°C max
STOP
40°C
104°F
43°C
109°F
45°C
113°F
= 50°C
118°F
1
2
1
2
24
min.
80mm
min.15mm
min.
80mm
P
bar
MAX.
10
0,5
5
1
Q
(3 bar)
T
°C
MAX. 80
65
55
l/min
13