Instructions for automatic test option

1. Instruction for Automatic test function

Once the unit is powered up, a self-diagnostics test will be automatically initiated:

- Check battery, lamp, charge board and transfer fault all the time.
- Run 3mins duration test every month.
- Run 3H duration test every year.

Note: All test functions are preset and no need field adjustment.

•	One flash, 4s pause	Battery disconnected
••	Two flashes, 4s pause	Low battery voltage
•••	Three flashes, 4s pause	Charge board fault
••••	Four flashes, 4s pause	AC/DC transfer fault
•••••	Five flashes, 4s pause	LED lamp fault

Note: When the fault is recovered, press the test button for 2s, the red flashing indicator will turn green. The fault is cleared, and the unit is back to normal.

2. Dual Colour LED Status Indicator Meaning

- Green indicator solid on: Ready/ Normal Operation
- Red indicator flashes: Require service

3. Button Test

Press test button once	run a 30s duration test
Press test button twice within 2s	run a 3mins duration test
Press test button 3 times within 2s	run a 30mins duration test
Press test button 4 times within 2s	run a 3H duration test

Technical Specifications:

Voltage	220-240VAC, 50/60Hz
Lumen Output	ST: 550Lm / HO: 1000Lm
Mains Power	18W Max.
Emergency Power	ST: 5W / HO: 10W
Battery	LiFePO4 6.4V 6000Mah
Charge Time	>24H
Discharge Duration	3H
CCT	3000K / 4000K / 5000K
CRI	0.10m²
Test Mode	AT
Protection Class	Class I
IP Rating	IP66
IK Rating	IK07
Material	Aluminium Alloy (ADC12)
Operation Temperature	0℃~45℃
Mounting Type	Wall Mount

Terms and symbols (as relevant to product)

The **CE mark** indicates that this product complies with EU regulations on safety, health and environmental protection;

The **WEEE symbol** stands for "Waste Electrical and Electronic Equipment Regulation," a directive on the collection, recycling and recovery of electronic waste;

The **Class I** symbol indicates that this product is protected by means of the additional ground cable. This cable is identified by the yellow/green jacket and is attached to this product.

TRONIX

Instruction Manual Outdoor Emergency Wall Light 600-050

Safety Warnings Before Installation:

- Disconnect mains power before installation or maintenance. Working on a live circuit may lead to electric shock or fire.
- Installation must be carried out by a qualified electrician. Improper installation may cause injury or system failure.
- This luminaire must be earthed (Class I). Use the yellow/green grounding wire and connect it securely.
- Do not install in environments exceeding rated temperature or humidity. Ambient temperature range: 0°C to +45°C.
- Do not modify or tamper with the internal components. Doing so voids CE compliance and warranty.
- Use only original LiFePO4 batteries and approved accessories. Incorrect types may cause malfunction or fire.
- Ensure proper cable diameter and secure strain relief. Maintain IP66 rating after wiring.
- Do not cover the luminaire with insulation or obstruct airflow. Risk of overheating and damage.
- Check local regulations for emergency lighting layout, mounting height and testing frequency.

Applications:

- Building façades; Mounted on exterior walls to provide emergency illumination during power outages.
- Above emergency exits; Clearly marks escape routes and ensures visibility at all times.
- Outdoor evacuation areas; Weatherproof IP66 design makes it suitable for exposed environments.

Dimensions (mm)

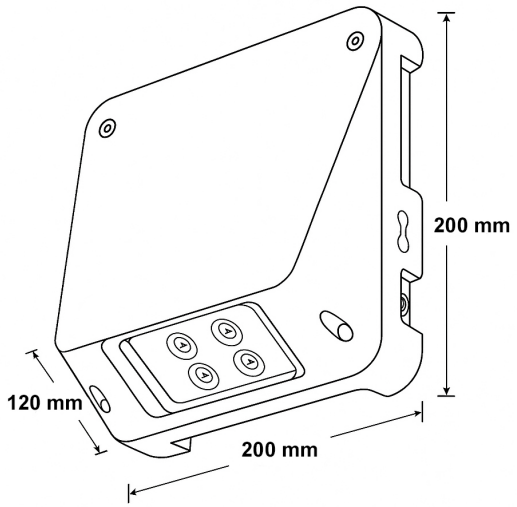

Installation:

Carefully unscrew and remove the front cover using a hex wrench.

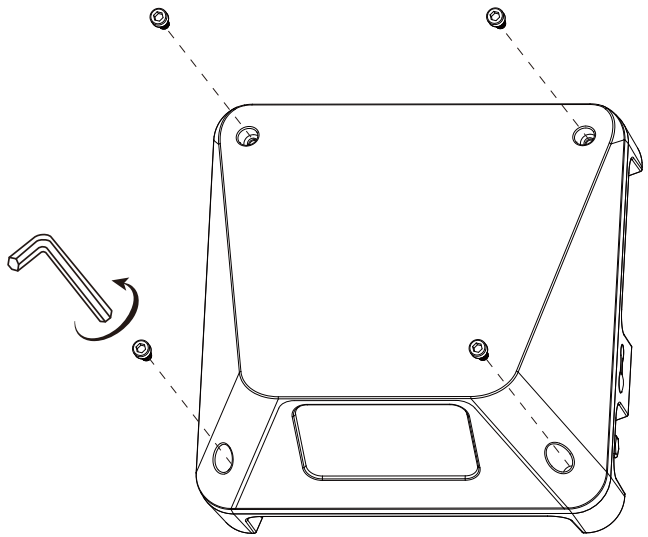

Secure the back housing to the wall using four screws. Then remove the strain relief by unscrewing the three mounting screws.

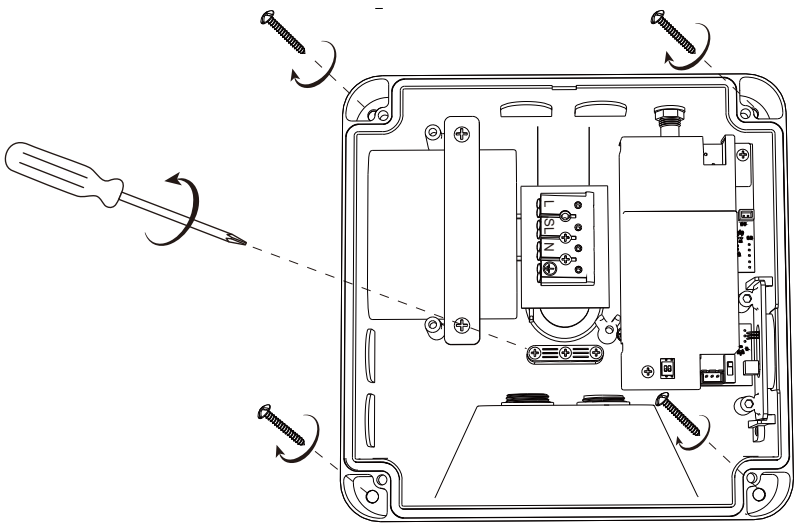

Feed the AC cable through the entry hole and crimping groove. Connect L, N, PE, and optionally LS for switched control. Reinstall the strain relief, connect the battery, and tighten the cable gland securely to ensure IP66 protection.

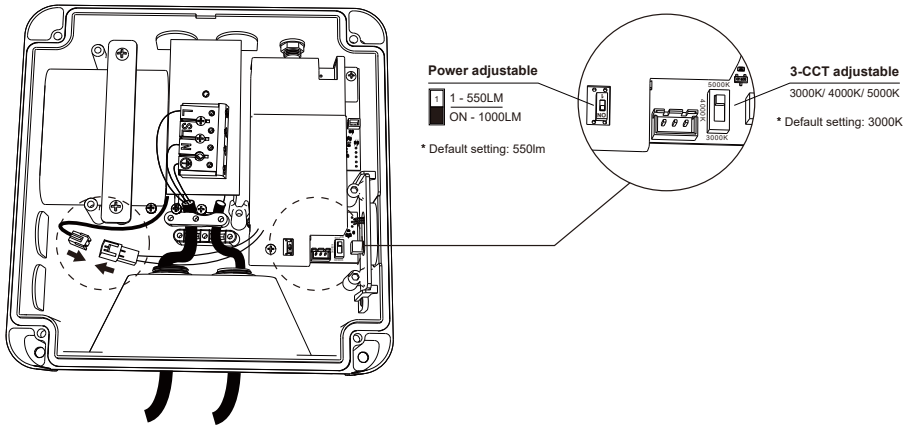

Once all wiring is complete, firmly tighten the cable gland using a suitable wrench to maintain the IP66 seal.

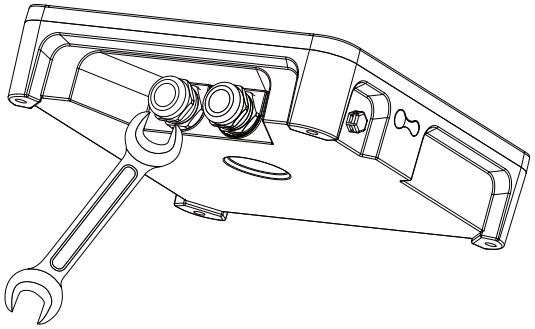
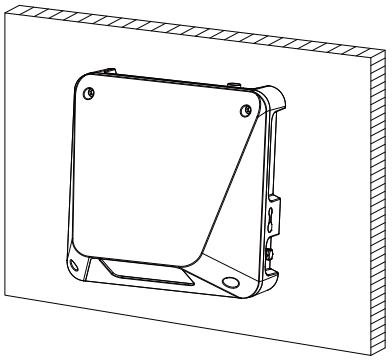
Lock the front cover with a hex wrench.