Data Sheet | Item Number: 788-154

Basic relay; Nominal input voltage: 24 VDC; 1 changeover contact; Limiting continuous current: 16 A; Module width: 13 mm; Module height: 15 mm

https://www.wago.com/788-154

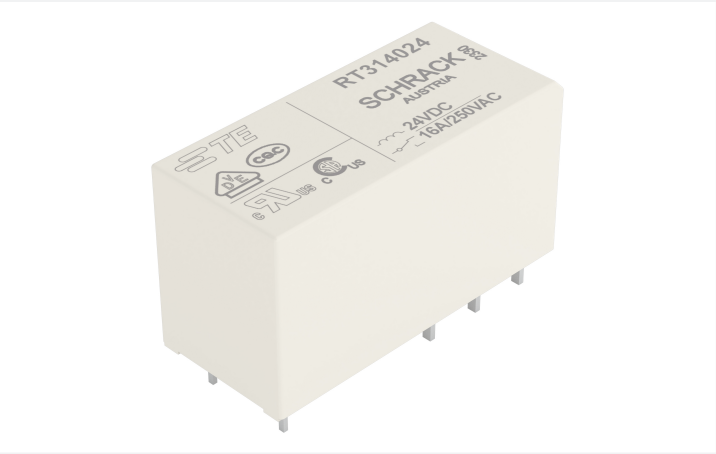

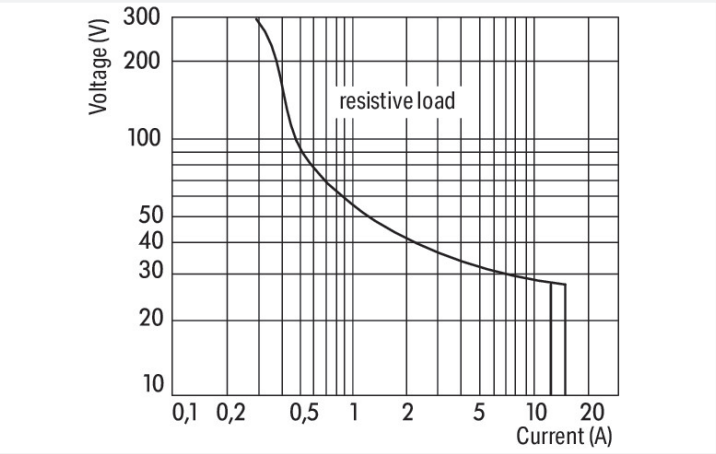

DC load limit curve

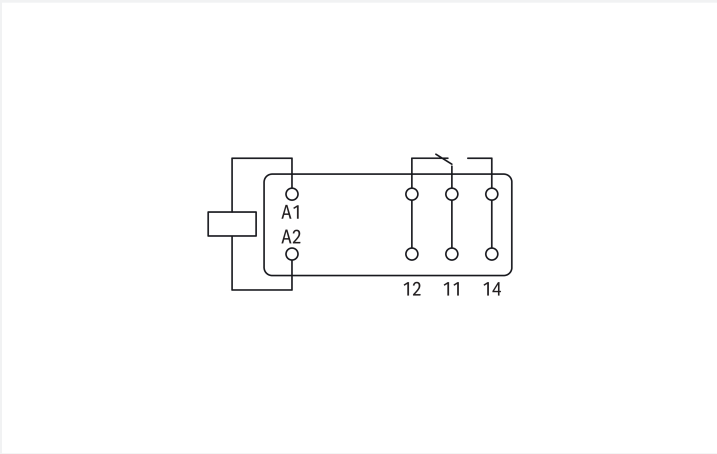

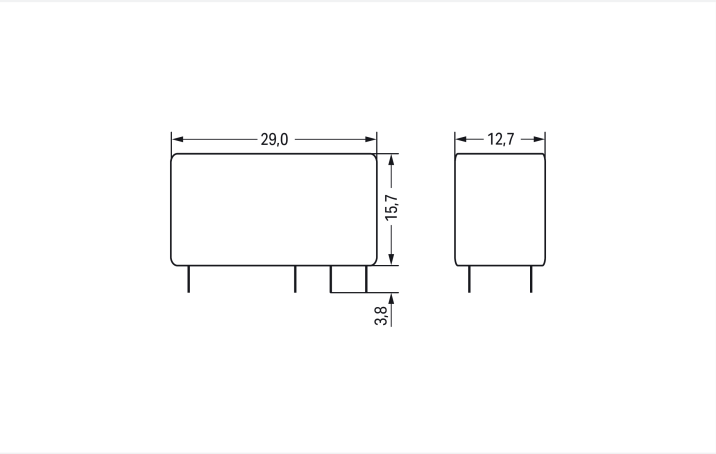

Dimensions in mm

Technical data

Control circuit

Nominal input voltage U_N	24 VDC
Nominal input current at U_N	17 mA

Load circuit

Number of changeover/switchover contacts	1
Contact material (relay)	AgNi 90/10
Limiting continuous current	16 A
Inrush current (resistive) max.	(AC) 30 A / 4 s
Switching Voltage, Max.	250 VAC
Switching power (resistive) max.	AC 4000 VA; DC (see load limit curve)
Switching capacity	AC-15: 6 A / 250 VAC; DC-13: 2 A / 24 VDC
Recommended minimum load	12 V / 10 mA
Pull-in time (typ.)	8 ms
Drop-out time (typ.)	6 ms
Bounce time (typ.)	6 ms
Electrical life (NO; resistive load; 23 °C)	30 x 10^3 switching operations
Mechanical life	30 x 10^6 switching operations
Switching frequency with/without load (max.)	6 min^{-1} / 1200 min^{-1}

Safety and protection

Dielectric strength (control/load circuit) (AC, 1 min)	5 kVrms
Dielectric strength (open contact) (AC, 1 min)	1 kVrms

Physical data

Width	12.7 mm / 0.5 inches
Height from the surface	15.7 mm / 0.618 inches
Depth	29 mm / 1.142 inches

Mechanical data

Mounting type	Pluggable module

Material data

Note (material data)	Information on material specifications can be found here
Fire load	0.25 MJ
Weight	14 g

Environmental requirements

Ambient temperature (operation at U_N)	-40 … +85 °C
Ambient temperature (storage)	-40 … +85 °C

 Continued on next page

Standards and Specifications

Standards/specifications	EN 61810-1

Commercial data

Product Group	6 (INTERFACE ELECTRONIC)
PU (SPU)	20 (1) pcs
Packaging type	Box
Country of origin	AT
GTIN	4045454396633
Customs tariff number	85364900990

Product Classification

UNSPSC	39122334
eCl@ss 10.0	27-37-16-01
eCl@ss 9.0	27-37-16-01
ETIM 9.0	EC001437
ETIM 10.0	EC001437
ECCN	NO US CLASSIFICATION

Environmental Product Compliance

RoHS Compliance Status	Compliant,No Exemption
SCIP notification number (Austria)	7a571d4c-192a-4ca2-85de-304cdbac31bb
SCIP notification number (Belgium)	52d423f3-8808-4329-b1e2-ba8286d96e6b
SCIP notification number (Bulgaria)	06718a1c-6c47-4311-b2ca-9b0af63a96c3
SCIP notification number (Czech Republic)	4d22e33f-96f1-40e2-bef3-5de13c7c564c
SCIP notification number (Denmark)	2a1d33f4-0c9d-4a74-a927-88c4df768ed9
SCIP notification number (Finland)	4834f906-499b-4c29-86df-8c1a554f4332
SCIP notification number (France)	a9093bca-47c8-4466-a73b-621a75b9d715
SCIP notification number (Germany)	ba63bd51-c15d-4b6a-9e23-bb91602c47c2
SCIP notification number (Hungary)	18d4e688-25da-4afb-a639-f2a5d7986032
SCIP notification number (Italy)	4bbceb96-2015-4ae8-bc12-7e44172e2534
SCIP notification number (Netherlands)	9e1b60f4-54c2-469d-9d0e-830fd42a7369
SCIP notification number (Poland)	410db261-de04-41ba-954e-3e1d8d1cdaa9
SCIP notification number (Romania)	ef3ffcf5-e50a-4f4a-9d19-f8866f8e785c
SCIP notification number (Sweden)	22900c6d-2722-4dad-85e3-fa1dc511c316

Downloads

Environmental Product Compliance

Compliance Search

Environmental Product Compliance 788-154

 Continued on next page

Documentation

Bid Text			
788-154	19.02.2019	xml 3.49 KB	
788-154	20.02.2019	docx 15.23 KB	

CAD/CAE-Data

CAD data	CAE data
2D/3D Models 788-154	WSCAD Universe 788-154

1 Compatible Products

1.1 Optional Accessories

1.1.1 Socket

1.1.1.1 Socket without relay

Item No.: 788-100
Relay socket; 1 changeover contact; for 15 mm basic relays; gray