1AE/O-16

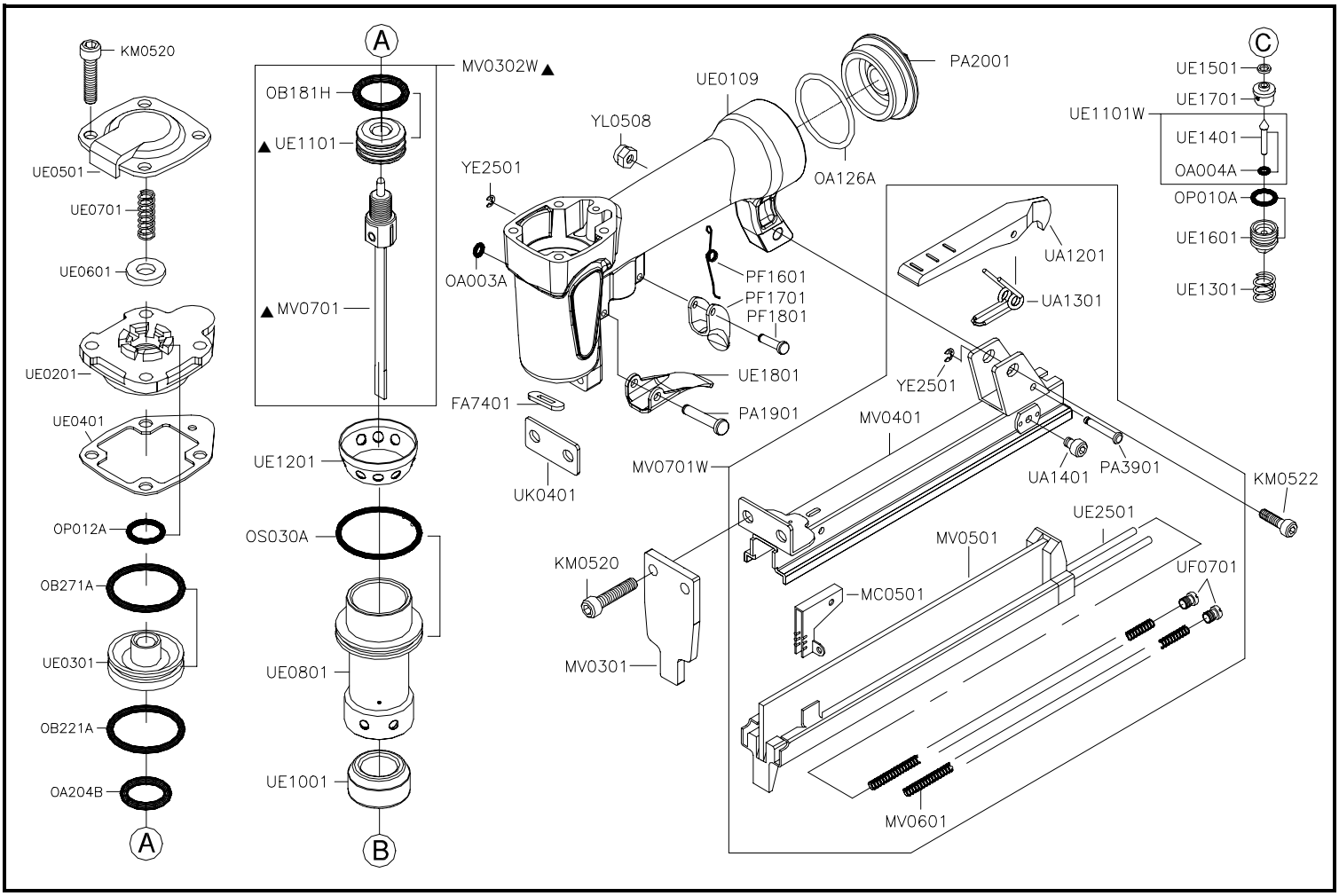

Part_No	Description	Spec	Q'ty	Part_No	Description	Spec	Q'ty	Part_No	Description	Spec	Q'ty
FA7401	NOZZLE		1	OP010A	O-RING	P10	1	UE0701	COMPRESSION SPRING		1
KM0520	HEX.SOC.HD.BOLT	M5×0.8－20L	6	OP012A	O-RING	P12	1	UE0801	CYLINDER		1
KM0522	HEX.SOC.HD.BOLT	M5×0.8－22L	1	OS030A	O-RING	S-30	1	UE1001	BUMPER		1
MC0501	PUSHER		1	PA1901	PIN		1	▲ UE1101	MAIN PISTON		1
MV0301	COVER PLATE		1	PA2001	END CAP		1	UE1101W	TRIGGER VALVE ASSY.		1
▲ MV0302W	DRIVER ASSY.		1	PA3901	PIN		1	UE1201	COLLAR		1
MV0401	MAGAZINE CAP SET		1	PF1601	SPRING		1	UE1301	COMPRESSION SPRING		1
MV0501	MAGAZINE SEAT SET		1	PF1701	SAFETY LEVER		1	UE1401	TRIGGER VALVE STEM		1
MV0601	COMPRESSION SPRING		2	PF1801	PIN		1	UE1501	SEAL		1
▲ MV0701	DRIVER SET		1	UA1201	LATCH		1	UE1601	TRIGGER VALVE GUIDE		1
MV0701W	MAGAZINE ASSY.		1	UA1301	LATCH SPRING		1	UE1701	TRIGGER VALVE SEAT		1
OA003A	O-RING	ARP568-003	1	UA1401	RETAINER SCREW		2	UE1801	TRIGGER		1
OA004A	O-RING	ARP568-004	1	UE0109	BODY		1	UE2501	GUIDE STEM		2
OA126A	O-RING	ARP568-126	1	UE0201	CYLINDER CAP		1	UF0701	HEX.SOC.SET SCREW		2
OA204B	O-RING	ARP568-204	1	UE0301	HEAD VALVE PISTON		1	UK0401	SPACER		1
OB181H	O-RING	17.7×3.0	1	UE0401	CAP SEAL		1	YE2501	E-RING	∮2.5	2
OB221A	O-RING	22×3	1	UE0501	EXHAUST CAP		1	YL0508	LOCK NUT	M5×0.8	1
OB271A	O-RING	26.8×2.4	1	UE0601	PISTON STOP		1				

★☆ If you need to order parts, please mark both Parts No. and Description. ☆★ (MV/A1-02)